TAC Pneumatic Products Catalog

t.a.c®

General Information

TAC

TAC is a Schneider Electric Company with a long tradition of global leadership in building controls technology. We off the most extensive line of controls and components available to today's market, including valve bodies, valve assemblies, actuation devices and sensors, as well as interfaces, and automated systems that link these products and other building systems together.

With many patents awarded for our product designs, TAC offers the most innovative line of state-of-the-art HVAC control systems and devices in the industry. Superior engineering, combined with ISO 9001 certification and six-sigma lean manufacturing, ensures that our products conform to the highest standards of internationally recognized quality, providing solid performance, unsurpassed value, and exceptional reliability for our customers.

Through OEM's, Distributors, and a world-wide network of Field Offices, TAC is a single source for all building control needs. Consult **www.tac.com** for your nearest TAC distributor.

TAC Pneumatic Products

Building on the heritage of the Robertshaw and TAC Barber-Colman pneumatic product families, TAC offers a complete range of pneumatic products, including thermostats, sensors, valve and damper actuators, controllers, TAC Pneumodular® control panels, and a wide range of accessories to provide all the pneumatic control components needed for the installation and maintenance of complete pneumatic systems.

Organization and Index Systems

The TAC Pneumatic Products Catalog is organized alphanumerically by product number. For a brief description of the model numbering system, consult the **Part Numbering System** chart on the following page. A **Subject Index** follows and a **Model Number Index**. The **Subject Index** is used when you know what subject you are looking for, but are not sure of the specific model number of a specific product. The **Model Number Index** mirrors the organization of the catalog and is used when you know the specific model number.

Other TAC Product Catalogs

TAC also offers a complete range of electric/electronic products and valves in addition to its pneumatic products. These are covered in separate catalogs:

F-27382 TAC Electric/Electronic Products Catalog

F-25683 TAC Field Devices Catalog (CD version F-25684)

All specifications are nominal and may change as design improvements are introduced. TAC shall not be liable for damages resulting from misapplication or misuse of its products.

Part Numbering System

Primary Designation (First Letter)

A	Accessories
H	Humidity
P	Pressure
S	Switch or Step Controller
V	Valve
C	Controller or Controlled Device
M	Motor (Actuator)
R	Receiver-Controller or P.E. Switch

Alpha Prefix Combinations

AD	accessory, electronic or electronic control package
AE	accessory, electric
AH	accessory, humidity
AK	pneumatic relay or positioner
AKR	accessory, pneumatic replacement
AKS	accessory, pneumatic
AL	accessory, pneumatic or E.P. relays
AM	accessory, motor
AP	accessory, pressure
ASP	accessory, electronic
AT	accessory, thermostat
AV	accessory, valve
C	cover, 2" x 2" pneumatic thermostats
CC	controller/controlled device, electronic
CN	multi-purpose bridge, electronic
CP	controller/controlled device, electronic
CT	cover, 2" x 2" pneumatic thermostats
H	humidistat or humidity transmitter, pneumatic
HC	humidity, two-position (three-wire), electric
HKS	humidity or enthalpy transmitter, pneumatic
HS	humidity sensor, electronic
HSP	humidity transmitter, electronic
HTSP	humidity/temperature transmitter, electronic
M	motor, pneumatic, with or without positioner
MA	motor, two-position, spring return, electric
MC	motor, two-position (three-wire), electric
MCS	accessories, modular control systems (TAC PNEUMODULAR®)
ME	motor
MF	motor, floating, proportional
MK	motor, pneumatic
MK4	motor, pneumatic with positive positioner
MM	motor, modular
MMC	control card, modular motor
MMR	replacement motor, modular
MP	motor, proportional, electric or electronic
MS	motor, proportional, electronic
MU	motor, proportional, temp., electric or electronic
N	thermostat, accessories
P	pressure or differential pressure transmitter, or receiver-controller, pneumatic
PC	pressure, two-position (three-wire), electric
PCP	TAC PNEUMODULAR control panels
PF	pressure, floating, electric
PKSR	differential water pressure or air velocity transmitters, pneumatic
PP	pressure, proportional, electric or pneumatic
R	electric power relays, pneumatic relays, P.E. switches, and VAV controllers
RKS	receiver-controller, pneumatic
RKSR	receiver-controller, pneumatic replacement
S	switch, pneumatic
SLC	controller, solid-state
SP	step controller, proportional, electric, pneumatic, or electronic
T	thermostat or transmitter, pneumatic
TA	thermostat, two-position, electric
TC	thermostat, two-position, electric
TF	thermostat, floating
THC	enthalpy controller, electric
THCR	enthalpy controller, electric replacement
TK	thermostat, pneumatic
TKR	thermostat, pneumatic replacement
TKS	temperature transmitters, pneumatic
TOOL	calibration fixtures, kits, and tools
TP	thermostat, proportional, electric or electronic
TR	thermostat, pneumatic replacement
TS	temperature sensor, electronic
TSP	temperature transmitter, electronic
VA	valve, two-position, spring return, electric
VB	valve body
VC	valve, two-position (three-wire), electric
VK	valve, pneumatic
VK4	valve, pneumatic with positive positioner
VM	valve, modular motor
VP	valve, proportional, electric or electronic
VS	valve, electronic

Subject Index

Accessories

Actuators

Adaptors

Bulb Wells

Controllers

Enclosures

Gauges

Humidistat

Kits

Mounting

Subject Index

Model Number Index

Model Number Index

Model Number Index

Model Number Index

Model Number Index

Model Number Index

Aspirating Box for T-Series (2 x 2 in.) Devices

These aspirating boxes are designed to permit flush mounting of Txx (2 x 2 in.) pneumatic room thermostats where room decor, instrument protection, or other application requirements make this desirable. These aspirators use control system air on the venturi principle to induce the flow of room air across a thermostat sensing element.

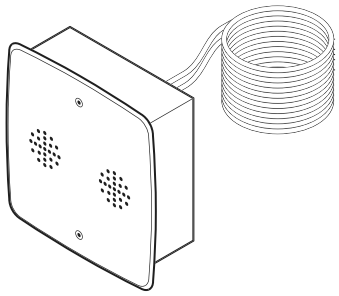

Features:

- Attractive appearance.
- Powerful aspirator ensures movement of room air through aspirating box.
- Room air contacts sensing element quickly.
- Mounts 2 x 2 in. thermostats, humidistat, temperature or humidity transmitter (except T27).

Model Chart

Model No.	Wholesale Model No.	Description
10-15	20-695	Refer to Specifications.
—	20-676	20-695 with stainless steel cover.

Specifications

Construction	
Cover	Hinged, 5/64 in. hexhead screws.
Finish	Satin chrome enamel.
Supply air pressure	Clean, dry, oil free air required (refer. EN-123).
Minimum	15 psig (103 kPa).
Maximum	30 psig (207 kPa).
Connections	Copper tubing, 8 ft. (2.4 m) length.
Air consumption	27.7 scim (7.5 mL/s).
Adjustments	None.
Mounting	Designed for the most common wall types.
Dimensions	4-3/4 W x 4-3/4 H x 3-1/8 D in. (121 x 121 x 79 mm).

Accessories

Model No.	Description
TOOL-082	5/64 in. hexhead wrench.
RH-33709-A26	1/8-40 UNC-2A 1-1/2 in. long round slotted screw.

Receiver Gauges

Receiver gauges for continuous indication of temperature, differential static pressure, differential pressure, pressure, enthalpy, or humidity in conjunction with a transmitter-receiver system. Select "donut" type dials listed for required application.

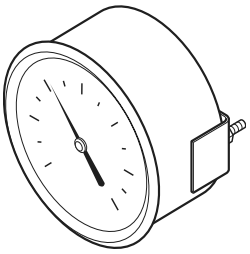

A251-1
A252

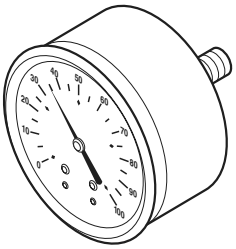

A253-12

Features:

- Receiver-gauges receive output signals of pneumatic transmitters and provide readout of measured (and/or controlled) variables at convenient locations.
- Gauge dials available to match each pneumatic transmitter range.
- 2 in. model available for stem mounting.
- 2-1/2 and 3-1/2 in. models available for flush mounting.

Model Chart

Model No.	Wholesale Model No.	Dial Size In.	Pointer	Mounting	Air Connection	Construction and Finish
A251-1	2422-001[a b]	2-1/2	Adjustable	Flush with "U" clamp for panels	1/8 in. -27 MNPT center back	Black plastic case
A252	2422-002[a c]	3-1/2				Zinc plated steel case with chrome plated snap-out ring
A253-12	2422-003[a d]	2		Stem		Black plastic case

[a] Wholesale supplies these as gauge kits. Each gauge kit includes a gauge and a gauge overlay kit.

[b] To replace 2-1/2 in. gauge overlays, order Wholesale overlay kit 2890-002.

[c] To replace 3-1/2 in. gauge overlays, order Wholesale overlay kit 2890-003.

[d] To replace 2 in. gauge overlays, order Wholesale overlay kit 2890-001.

Options — Receiver Gauge Dials.

Range	2 in. for A253-12	2-1/2 in. for A251-1	3-1/2 in. for A252	For Use with the Following Transmitters
0 to 100°F	Printed on dial face	24-50	25-50	T150-1021,1022, -1023
40 to 140°F	23-51	24-51	25-51	T150-1011,-1012, -1013
40 to 240°F	23-52	24-52	25-52	T150-1031,-1035
-40 to 160°F	23-53	24-53	25-53	T150-1041, -1046
-25 to 125°F	23-54	24-54	25-54	T150-1054,-1055
50 to 90°F	23-56	24-56	25-56	T53-301
62.5 to 92.5°F	—	24-57	25-57	100-51 (T461/T463 Sensor) D.A.
30% to 80% RH	23-58	24-58	25-58	H53-301
20 to 45 BTU/lb	23-61	24-61	25-61	H102-101
-0.5 to +0.5 in. WC	23-62	24-62	25-62	P323-01
0 to 3 in. WC	23-63	24-63	25-63	P323-03
0 to 10 in. WC	23-64	24-64	25-64	P323-10
30 to 80°F	23-65	24-65	25-65	T150-1062
-0.05 to +0.20 in. WC	—	24-66	25-66	P323-0025
-10 to 40 psig	23-67	24-67	25-67	P301-040

Options — Receiver Gauge Dials. (Continued)

Range	2 in. for A253-12	2-1/2 in. for A251-1	3-1/2 in. for A252	For Use with the Following Transmitters
0 to 150 psig	23-68[a]	24-68[a]	25-68[a]	P301-150
0 to 300 psig	23-69[a]	24-69[a]	25-69[a]	P301-300
0 to 50 psig	23-70	24-70	25-70	Obsolete PKSR-9011
0 to 100 psig	23-71	24-71	25-71	Obsolete PKSR-9002
0% to 100% RH	23-72	24-72	25-72	H150-100
200 to 2000 FPM	23-80	—	25-80	Obsolete PKSR-9101
300 to 3000 FPM	23-81	24-81	25-81	Obsolete PKSR-9102
400 to 4000 FPM	—	—	25-82	Obsolete PKSR-9103
550 to 5500 FPM	23-83	—	25-83	Obsolete PKSR-9104
50 to 100°F	23-84	24-84	25-84	TKS-5001,-6001,T150-1073
50 to 150°F	23-85	24-85	25-85	T150-1082, -1083
10 to 90% RH	23-86	24-86	25-86	HKS-2033, -5033
16 to 40 BTU/lb.	—	24-87	—	HKS-8065
0 to 1.0 in. WC	23-92	24-92	25-92	P323-101

[a] For corresponding Wholesale overlays (dials), refer to the Wholesale Receiver Gauge Overlays chart.

Wholesale Receiver Gauge Overlays.

Range psig	Model No.	Wholesale Model No.	Dial Size in.
-10 to 40	23-67	21-580	2
-10 to 40	24-67	21-581	2-1/2
-10 to 40	25-67	21-582	3-1/2
0 to 150	23-68	21-583	2
0 to 150	24-68	21-584	2-1/2
0 to 150	25-68	21-585	3-1/2
0 to 300	23-69	21-586	2
0 to 300	24-69	21-587	2-1/2
0 to 300	25-69	21-588	3-1/2

Specifications

Air pressure	3 to 15 psig (21 to 103 kPa).
Construction	
Case	Refer to Model Chart.
Lens	Clear plastic.
Gauge actuation	Bronze Bourdon tube through sturdy brass gears.
Gauge dimensions	
A251-1	2-29/32 (74 mm) dia. x 2-1/2 (64 mm) D in.
A252	4 (102 mm) dia. x 2-1/2 (64 mm) D in.
A252-12	2-15/64 (57 mm) dia. x 1-53/64 (46 mm) D in.

Typical Applications

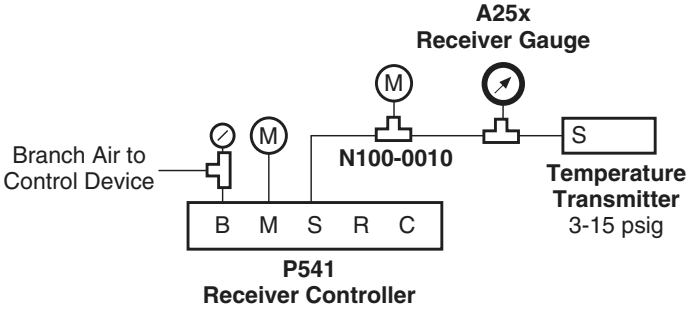

Figure 1 Typical Application.

Notes:

Receiver-Gauges may be connected at any point in the line between the transmitter and the receiver-controller (i.e., on either side of the restrictor-tee). More than one receiver-gauge may be connected to the same line if required.

Control Cabinets

Control cabinets for mounting of electric, electronic, and pneumatic controls.

Features:

- A variety of control cabinets enables selection of the best unit to suit the application.
- N100-9901 cabinet mounts up to 16 TAC PNEUMODULAR® components.
- Also see TAC PNEUMODULAR® Control Panels (PCP) on page 187.

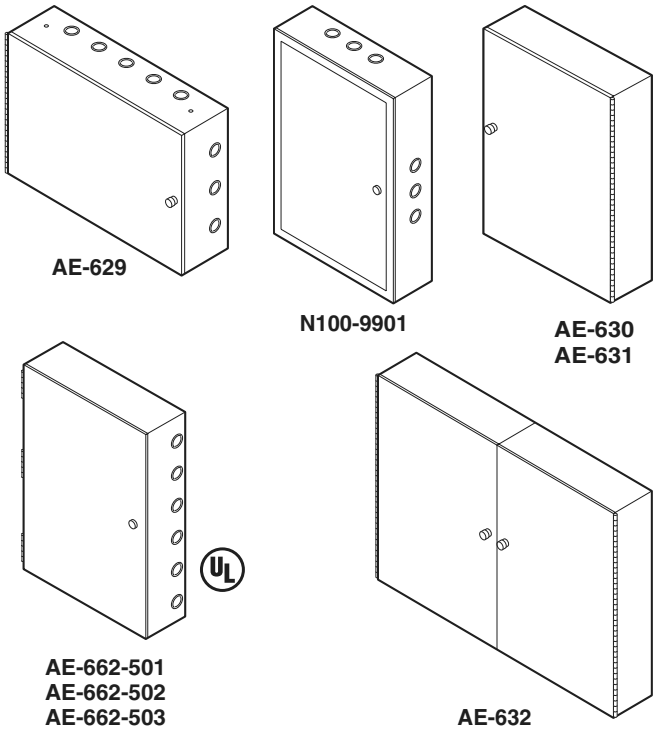

Model Chart

Model No.	Door		Steel Gage	Subpanel	Finish	Knockouts	Dimensions W x H x D in. (mm)
	Type	Opening					
AE-629	Single, continuously hinged	Right or left-handed	18	AE-631-100 or Obtain Locally	Beige paint	For 3/4 in. conduit, two on each side	24 x 16 x 7 (610 x 406 x 178)
AE-630				AE-630-101 or obtain locally			16 x 24 x 7 (406 x 610 x 178)
AE-631				AE-631-101 or Obtain Locally			24 x 32 x 7 (610 x 813 x 178)
AE-632	Double, continuously hinged	Right and left-handed	16	Obtain locally, one or two subpanels may be used			42 x 36 x 7 (1067 x 914 x 178)
AE-662-501	Single, three hinges	Left-handed	14	16 gage, perforated for #8 Type A sheet metal screws, flanged 23.075W x 28.325L	White paint	Five on top and bottom, six on each side for 3/4 in. or 1 in. conduit. Eight 3/8 in. dia. on top and bottom, ten on each side for 3/8 bulkhead barbed pneumatic fittings.	24 x 30 x 7-1/2 (610 x 762 x 191)
AE-662-502				16 gage, solid, flanged 23.075W x 28.325			
AE-662-503				None, mounting studs for subpanel not provided			
N100-9901	Removable, reversible	Right or left-handed	16	16 gage, holes on 2 in. centers horizontally and vertically 21.5W x 29.5L	Brown paint	Top, bottom and sides	24 x 32 x 8 (610 x 813 x 203)

Model Chart (Continued)

Model No.	Description	Dimensions W x H in. (mm)
AE-630-101	Subpanel for AE-629 and AE-630, 16 gage, perforated for #8 Type A sheet metal screws, flanged	14-1/2 x 20 (368 x 508)
AE-631-101	Subpanel for AE-631, 16 gage, perforated for #8 Type A sheet metal screws, flanged	22-1/2 x 28 (572 x 711)

Specifications

Construction	
Doors	Locking type, supplied with keys, rigidly supported. The doors are easily removed for protection on job site installation or mounting of components. Refer to Description Model Chart.
Steel Gage	Refer to Description Model Chart and N100-9901 Subpanels (T10) Model Chart.
Knockouts	Aligned so that a short nipple may be used to couple the panels. Refer to Description Model Chart.
Appearance	Refer to Description Model Chart.
Locations	NEMA Type 1.
Mounting	Four extruded mounting holes 1/4 in. (6mm).
Dimensions	Refer to Description Model Chart and N100-9901 Subpanels (T10) Model Chart.

Positive Positioning Relay

Positive positioner pneumatic relay is used to accurately position an actuator stroke with respect to signal pressure from the controller. It can also be used to change the effective spring range of an actuator and increase the capacity of a controller.

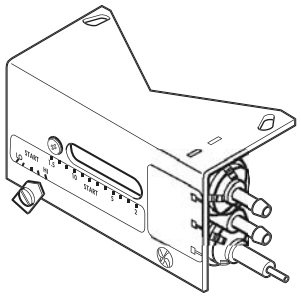

Features:

For accurate positioning of valve and damper actuators, this positioner utilizes a pilot-operated, relay-type position-sensing mechanism, much more sensitive to actuator position changes than some competitive “force-balance” positioners.

Model Chart

Model No.	Description
AK-42309-500[a]	Positive Positioning Relay with Mounting Linkage.

[a] AK-42309-500 positive positioner cannot be used with M556, M572, M573, M574, and MK-12000 Series actuators. Use N800-0555 positioner with M556, M573, and M574.

Specifications

Action	Direct (increase in output pressure to actuator with an increase in pilot pressure from controller).
Pilot input	0 to main air pressure, psig.
Output	0 to main air pressure, psig.
Construction	
Housing	Polysulfone.
Diaphragm	Neoprene.
Start point	Adjustable 1 to 12 psig (7 to 83 kPa).
Span	Adjustable 2 to 13 psi (14 to 90 kPa); factory set at 5 psig.
Stroke	Adjustable 2 to 13 psi (14 to 90 kPa); factory set at 5 psig with feedback spring for 7/16 to 5 in. stroke.
Supply air pressure	Clean, oil free, dry air required (refer. EN-123).
Maximum	30 psig (207 kPa).
Nominal supply	15 to 20 psig (103 to 138 kPa).
Environment	
Ambient temperature limits	Shipping: -40 to 160°F (-40 to 71°C). Operating: 32 to 140°F (0 to 60°C).
Humidity	5 to 95% R.H., non-condensing.
Locations	NEMA Type 1.
Air connection code	Refer to Figure 1.
Air connections	
“M” and “B”	Barbed for 1/4 in. O.D. plastic tubing.
“P”	Dual-contoured for 1/4 in. O.D. and 5/32 in. O.D. tubing.
Air consumption for sizing air compressor	19 scim(5.2 mL/s) at 20 psig (138 kPa) supply.
Air capacity for sizing air mains	20 scim (5.5 mL/s).
Flow capacity	860 scim (235 mL/s) at 20 psig (138 kPa) supply.
Mounting linkage	All necessary linkage provided to assemble AK-42309-500 to MK-2690-0-0-1 actuator and the following actuator series; MK-3000, MK-4400, MK-4600-0-01, MK-4700, MK-4800, MK-6600, MK-6800, MK-6900, MK-7100, MK-8800 and MK-8900.
Dimensions	2-1/2 H x 4-1/2 W x 3 D in. (64 x 114 x 76 mm).

Accessories

Model No.	Description
TOOL-095-1	Pneumatic calibration tool kit.
PKG-1089	Spring and feedback arm kit for AK-42309-500 (included with AK-42309-500).

Typical Applications

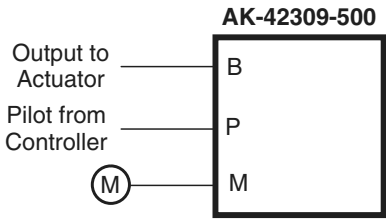

Figure 1 Piping Connections.

Differential Logic Module Relay

Pneumatic differential logic module relay typically used for comparison of outdoor and return air enthalpy transmitters to position the outdoor and return air dampers, providing energy conservation, when the outdoor air enthalpy is higher than the return air enthalpy.

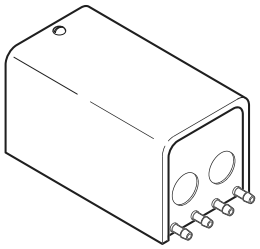

Features:

Compares two pneumatic signals; provides a high-gain pneumatic output pressure change based on the input signal comparison.

Model Chart

Model No.	Input Pressures	Output Pressure
AK-52101	“1” equal or less than input “2”	Less than 3 psig (21 kPa).
	“1” greater than input “2”	Greater than 13 psig (90 kPa) when supply to port “M” is 15 psig (103 kPa) or higher. Max. output, supply at port “M”.

Specifications

Output pressure vs. input pressures	Refer to Model Chart.
Construction	
Housing	Base, zinc plated steel; cover, aluminum.
Relay diaphragm	Neoprene coated, continuous fabric.
Bias adjustment	Compensation for transmitter input and system variations.
Air pressure	Clean, oil free, dry air required (reference EN-123).
Maximum	30 psig (207 kPa).
Ambient limits	
Shipping temperatures	-40 to 150°F (-40 to 65°C).
Operating temperatures	40 to 150°F (4 to 65°C).
Humidity	0 to 98% RH, non-condensing.
Air connection code	Refer to Figure 1.
Air connections	Barbed for 1/4 in. O.D. plastic tubing.
Air consumption for sizing air compressor	41.5 scim(11.3 mL/s) at 20 psig (138 kPa). When supplied by a controller 0 scim (0 mL/s).
Air capacity for sizing air mains	48 scim (13.2 mL/s) at 20 psig (138 kPa) supply.
Mounting	Panel or wall, three mounting holes are provided for No. 8 or No. 10 screws.
Dimensions	6 H x 3-3/8 W x 3-1/16 D in. (152 x 86 x 78 mm).

Typical Applications

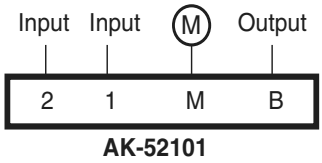

Figure 1 Piping Connections.

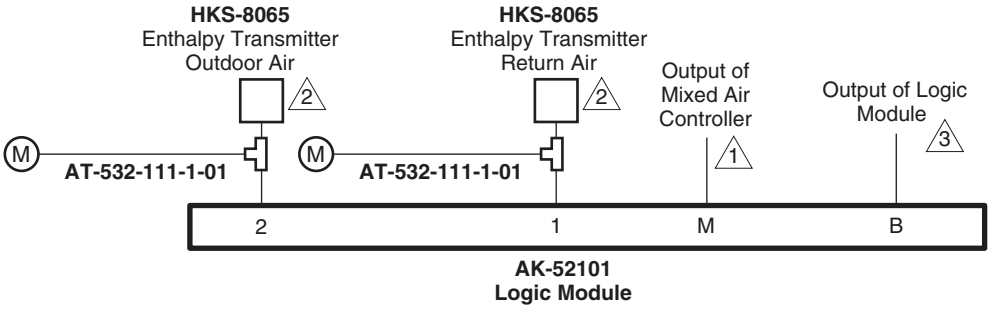

1 Relay Type or 20 psig Supply Air.

2 When temperature transmitters are used, the transmitters should be of the same range and span.

3 Output of Logic Module to Signal (S) port of: S511-5 or S511-10 Minimum-Position Switch; R504 Series Diverting/Switching Relay (snap-acting); or damper actuators - depending on desired sequence of operation.

Figure 2 Typical Enthalpy Comparison System.

Limiting, 1:1 Ratio Relay and Scale Plates

Pneumatic 1:1 ratio direct acting relay is used to limit minimum or maximum output pressure. The AKR-40605 can also be used as a manual positioner, 1:1 ratio relay, or lowest of two pressures selector. Relay will also increase the capacity of a controller (except when used as maximum output limiter or lowest pressure selector).

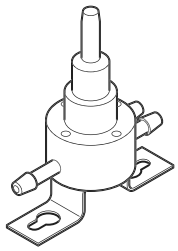

AKR-40605

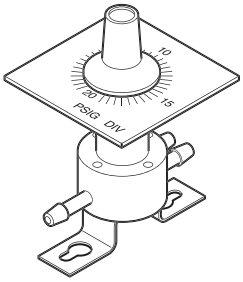

AKR-40605 Shown with AK-53098 Scale Plate and Knob

Model Chart

Model No.	Description	Output	Air Connection Code		
			Port P	Port B[a]	Port M
AKR-40605	Minimum output limiting	Minimum output adjustable 0 to 20 psig (0 to 138 kPa)	Pilot	Output	Main
	Maximum output limiting	Maximum output adjustable 0 to 20 psig (0 to 138 kPa)	Open to atmosphere		Input
	Manual positioner	Manually selected from 0 to 20 psig (0 to 138 kPa)			Main
	1:1 Ratio relay	0 to 20 psig (0 to 138 kPa)	Pilot		
	Lowest pressure selector	Lowest of two pressures 0 to 20 psig (0 to 138 kPa)	Input		Input

[a] Output pressure will drop to 0 when main air supply is reduced to 0. The reduced air pressure allows controlled device(s) to return to an ensured safe condition when main air pressure to the AKR-40605 is relieved.

Specifications

Action	1:1 direct.
Output	Refer to Model Chart.
Construction	
Housing	Polysulfone.
Diaphragm	Neoprene.
Adjustments	Refer to Model Chart for outputs.
Air pressure	Clean, oil free, dry air required (reference EN-123).
Maximum	30 psig (207 kPa).
Nominal supply	15 to 25 psig (103 to 138 kPa).
Ambient limits	
Shipping and storage	-40 to 160°F (-40 to 71°C).
Operating	32 to 140°F (0 to 60°C).
Humidity	5 to 95% RH, non-condensing.
Air connection code	Refer to Model Chart.
Air connections	Barbed for 1/4 in. O.D. plastic tubing.
Air consumption for sizing air compressor	3.5 scim (0.9 mL/s).
Air capacity for sizing air mains	16 scim (4.4 mL/s).
Mounting	Panel, wall or in-line; mounting plate and two push-in fasteners for perforated metal subpanel provided.
Panel space required	4 H x 2-7/16 W x 1-3/4 D in. (102 x 62 x 44 mm).

Accessories

Model No.	Description (Scale Plate and Knob Kits)
AK-53098	0 to 20 psig.
AK-53198	% Min. Outdoor Air (O.A.).
AK-53298	“Increase” CW.
AK-53398	“Increase” CCW.
AK-53498	“Close” CW.
AK-53598	“Close” CCW.
AK-53698	“Warmer” CW.
AK-53798	“Warmer” CCW.

Typical Applications

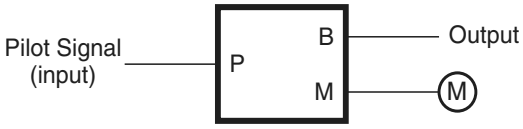

AKR-40605

Minimum Output Limiting Application Shown

Figure 1 Piping Connections.

Receiver Controller Setpoint Adjuster and Scale Plates

Setpoint adjuster and scale plates used to provide remote setpoint adjustment of RKS-2001, RKS-4002, and RKSR-4000 receiver-controllers. May also be used to manually pilot pneumatic relays.

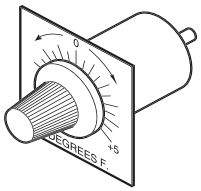

AKS-1100 with Scale Plate

Features:

- Allows the setpoint of a pneumatic receiver-controller to be raised or lowered from a location up to 1000 ft. (305 m) from the receiver-controller.
- Series available to work with various transmitter ranges.
- A receiver gauge, mounted near the setpoint adjuster shows the actual result of remotely adjusting the receiver-controller's setpoint.

Model Chart

Model No.	Description
AKS-1100	Remote setpoint adjuster.

Specifications

Construction	Aluminum housing, precision flapper-nozzle assembly.
Output	Linear 3 to 15 psig (21 to 102 kPa).
Air pressure	Clean, oil free, dry air required (reference EN-123).
Maximum	30 psig (207 kPa).
Ambient limits	
Shipping temperatures	-40 to 150°F (-40 to 65°C).
Operating temperatures	40 to 120°F (4 to 49°C).
Humidity	5 to 95% RH, non-condensing.
Air connection	Barbed connection for 1/4 in. O.D. plastic tubing.
Air consumption for sizing air compressor	41.5 scim (11.3 mL/s).
Air capacity for sizing air mains	48 scim (13.1 mL/s).
Mounting	Panel or wall box. Panel requires 5/8 in. (16 mm) hole for mounting the remote setpoint adjuster.
Panel space required	2-3/8 H x 2-1/4 W x 2-1/2 D in. (60 x 57 x 63 mm).
AKS-11xx scale plates (must be ordered separately)	White letters on black background, keyed for proper locating on setpoint adjuster.

Accessory Scale Plates (must be ordered separately).

Model No.	Description	For Use with the Following Transmitters
AKS-1129	±5°F Scale	TKS-5001, TKS-6001, T150-1062, T150-1073
AKS-1130	Closed — Open	Actuators
AKS-1131	Open — Closed	
AKS-1149	±5.5°C Scale	T150-1011, -1012, -1013, -1021, -1022, -1023, -1082, -1083
AKS-1169	±20°F Scale	T150-1031, T150-1035
AKS-1189	±8% R.H. Scale	HKS-2033, -5033
AKS-1199	±2 in. Water Scale	HKS-2033, -5033

Typical Applications

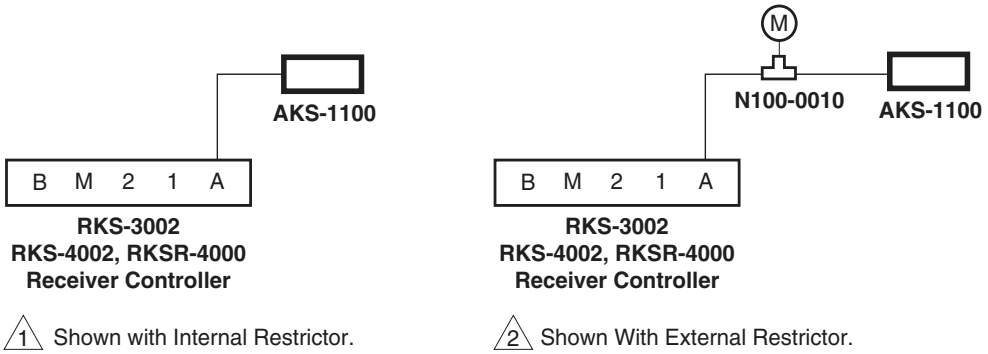

1 Shown with Internal Restrictor.

2 Shown With External Restrictor.

Figure 1 Typical Setpoint Adjuster Application.

NOTES: These apply to all receiver-controllers:

1. When internal restrictor is used, AKS-1100 must be located within 200 ft. (61 m) of receiver-controller.
2. When external restrictor is used, AKS-1100 must be located within 1000 ft. (305 m) of receiver-controller, and the restrictor must be located within 200 ft. (61 m) of the transmitter (preferably at the transmitter's location). Remove internal restrictor from receiver-controller and install blocking gasket.

Solenoid Air Valve

For applications where an electrical circuit is used to control a pneumatically operated device. Used to direct supply air to a pneumatic device when the coil is energized or de-energized depending on the supply and exhaust air connections. May be used for selection or diverting applications.

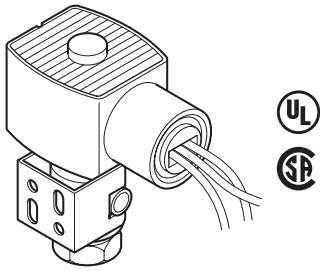

Features:

- High capacity of AL-15x Series allows operation of more devices.
- Brass body receives 1/8 in. male NPT fittings for simple connections to either polyethylene or copper tubing.
- All popular voltages from 24V to 480V available for maximum application flexibility.
- Includes mounting bracket.
- When a 1/8 in. fitting is installed, it secures the body of the valve to the mounting bracket.

Model Chart

Model No.	Voltage (AC 60 Hz)
AL-150	24
AL-151	120
AL-152	208
AL-153	240
AL-155	480

Specifications

Valve inputs	
Power input	9.1 Watts (energized).
Available voltages	Refer to Model Chart.
Electrical connections	18 in. (457 mm) leads on the coil. Threaded hole for 1/2 in. conduit.
Maximum inlet air pressure	40 psig (276 kPa). Clean, dry, oil free air is required (reference EN-123).
Air connections	1/8 in. NPT. N.C.: Normally closed, Port 2. N.O.: Normally open, Port 3. COM: Common, Port 1.
Valve outputs	
Flow capacity	1988 scim (543 mL/s) at 15 psig (138 kPa) supply with 1 psig (6.9 kPa) drop.
Environment	
Ambient temperature limits	Shipping: -40 to 150°F (-40 to 65°C). Operating: 32 to 125°F (0 to 52°C). Supply air: 40 to 130°F (4 to 54°C).
Humidity	50 to 95% RH, non-condensing.
Location	NEMA Types 1, 2, 3, 3S, 4, and 4X.
Dimensions	3-5/32 H x 2-3/4 W x 2 D in. (80 x 70 x 51 mm).

Typical Applications

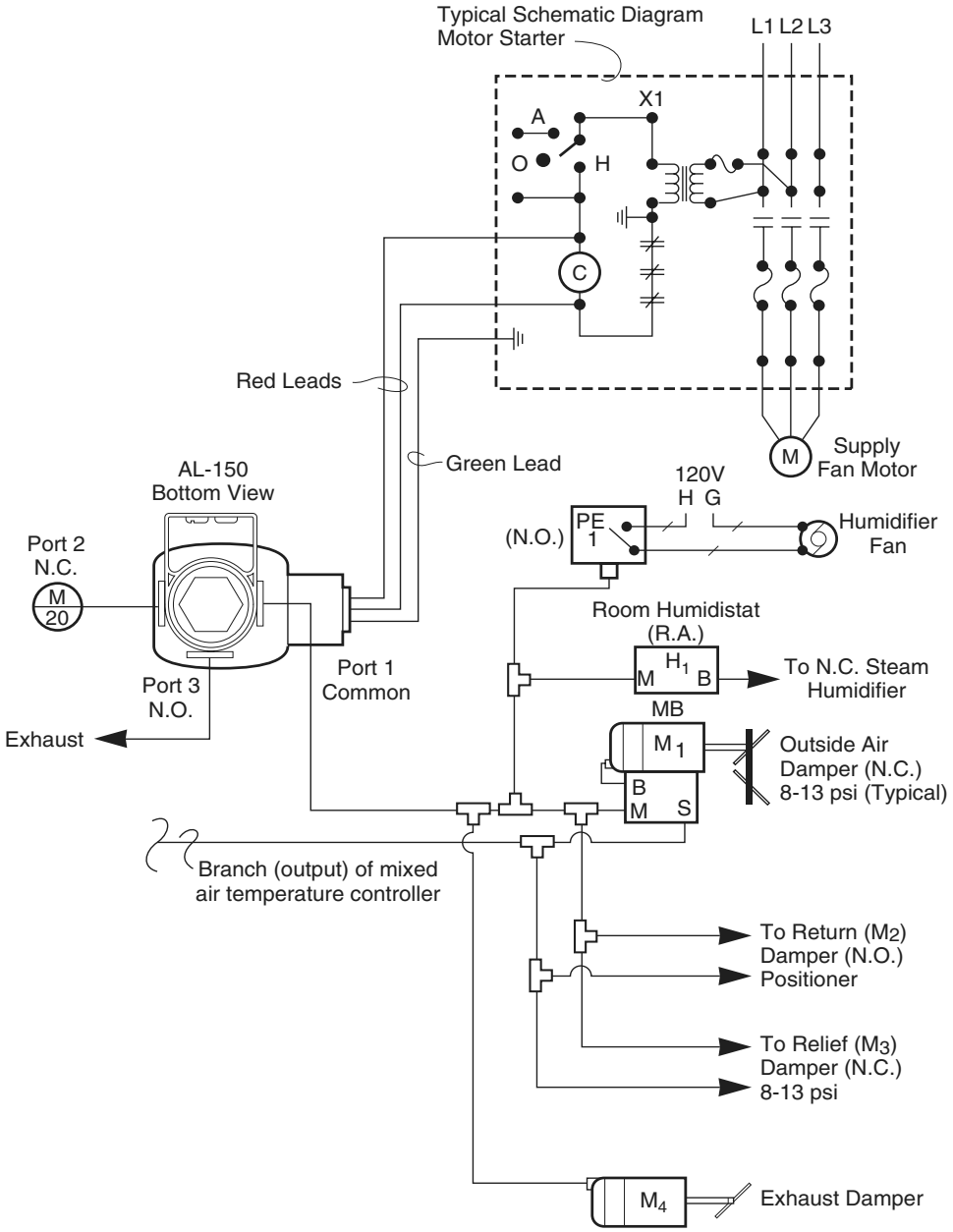

Figure 1 Typical Application Wiring Diagram.
(Air-Handling Unit Application)

Air Switching Valve

Three-way air switching valve is used for central supply air changeover in dual pressure systems.

Features:
Compact size; large air capacity.

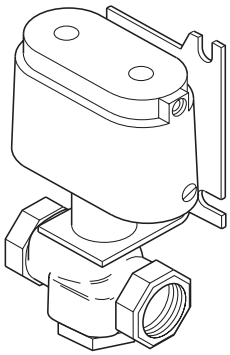

Model Chart

Model No.	Flow Pattern			
	Stem Up [No Air to Actuator]		Stem Down [20 psig (138 kPa) Air to Actuator]	
	Flow	Closed Port	Flow	Closed Port
AL-161-4	B to AB[a]	A	A to AB [a]	B

[a] AB Common.

Specifications

Construction	
Body	Bronze.
Actuator	Die cast aluminum with replaceable neoprene diaphragm.
Body rating	250 psig (1724 kPa).
Maximum air pressure (actuator)	30 psig (207 kPa).
Spring range	8 to 13 psig (55 to 90 kPa).
Flow capacity	25,920 scim (7,080 mL/s) at 15 psig (103 kPa) supply with 1 psig (6.9 kPa) drop.
Ambient temperature limits	
Shipping and storage	-40 to 220°F (-40 to 104°C).
Operating	40 to 130°F (4 to 54°C).
Supply air	40 to 130°F (4 to 54°C).
Port code and flow pattern	Refer to Model Chart.
Connections	
Actuator	1/8 in. FNPT.
Valve body	1/2 in. FNPT.
Mounting	In any position to wall or subpanel of a cabinet with factory assembled mounting bracket.
Dimensions	6-1/4 H x 3 W x 2-13/16 D in. (159 x 76 x 71 mm).

Typical Applications

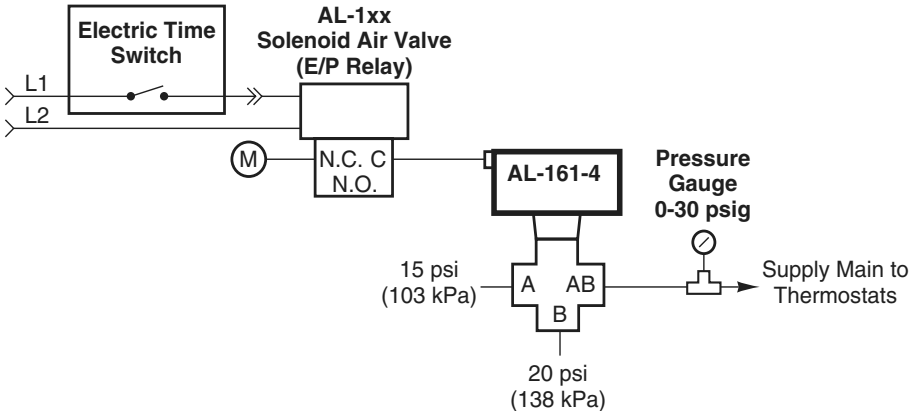

Figure 1 Typical Application.

Solenoid Air Valves

For applications where an electrical circuit is used to control a pneumatically-operated device. Used to direct supply air to a pneumatic device when the coil is energized or de-energized, depending on the supply and exhaust air connects.

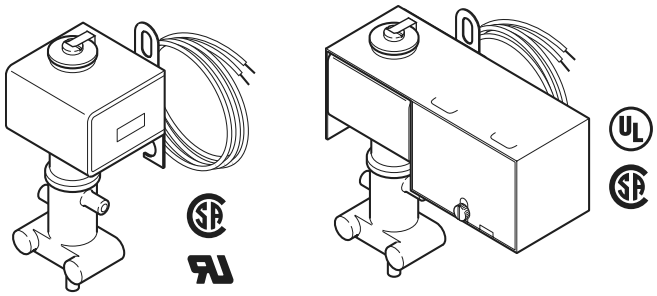

AL-17x AL-18x

Features:

- Open frame or junction box construction accommodates a wide variety of NEMA 1 mounting locations.
- Available in 24, 120, 208, 240, or 480 Vac models.
- Supplied with 18 in. electrical leads for ease of installation.
- Corrosion-resistant plastic body.
- Barbed fittings for 1/4 in. O.D. plastic tubing.

Model Chart

Model No.		Voltage (AC 60 Hz)	Replacement Coil Part Numbers
Open Frame	J-Box		
AL-170	AL-180	24	PNR-325-024
AL-171	AL-181	120	PNR-325-120
N/A	AL-181-201[a]	120	PNR-325-120
N/A	AL-182	208	—
N/A	AL-183	240	—
N/A	AL-185	480	PNR-325-480

[a] with wire harness.

Specifications

Valve inputs	
Power input	5.7 Watts (energized). 17.3 VA Inrush. 9.2 VA Holding.
Voltage	For available voltages, refer to Model Chart.
Electrical connections	18 in. (457 mm) leads on the coil.
Maximum inlet air pressure	30 psig (207 kPa). Clean, dry, oil free air is required (reference EN-123).
Air connections	Three plastic ferrules included for plastic 1/4 in. tubing (PKG-1141). N.C., Normally closed, Port 1. N.O., Normally open, Port 2. COM, Common, Port 3.
Valve outputs	
Flow capacity	519 scim (142 mL/sec) at 15 psig (103 kPa) supply with 1 psig (6.9 kPa) drop.
Environment	
Ambient temperature limits	Shipping: -40 to 150°F (-40 to 65°C). Operating: 40 to 130°F (4 to 54°C). Supply air: 40 to 130°F (4 to 54°C).
Humidity	50 to 95% RH, non-condensing.
Location	NEMA Type 1.
Mounting	Vertical with solenoid at top (as shown).
Dimensions	
AL-17x	3-5/16 H x 1-9/16 W x 1-7/32 D in. (84 x 40 x 31 mm).
AL-18x	3-3/4 H x 3-13/16 W x 1-3/8 D in. (95 x 97 x 35 mm).

Typical Applications

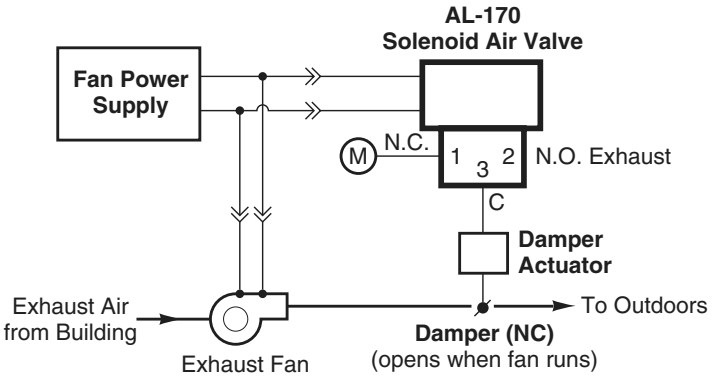

Figure 1 Typical Application Diagram.

Solenoid Air Valve

For applications where an electrical circuit is used to control a pneumatically operated device. Used to direct supply or control air to pneumatic devices when the coil is either energized or de-energized, depending on the supply and exhaust air connections.

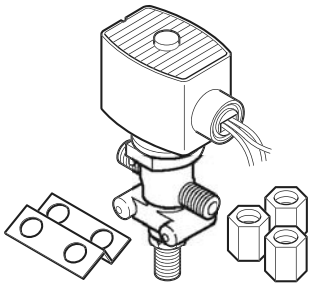

Features:

- Plastic corrosion-resistant body provides long life.
- Mounting bracket and fittings for 1/4 in. O.D. plastic tubing supplied with valve for simple, quick installation.
- High capacity of AL-19x Series allows more devices to be used with fewer solenoid air valves.
- All popular voltages from 24V to 480V available for maximum application flexibility.
- Large capacity solenoid air valves (E/P relays).

Model Chart

Model No.	Voltage (AC 60 Hz) +10/-15%
AL-190	24
AL-191	120
AL-192	208
AL-193	240
AL-195	480

Specifications

Valve inputs	
Power input	9.1 Watts (energized).
Available voltages	Refer to Model Chart.
Electrical connections	18 in. (457 mm) leads on the coil. Coil leads are red; ground lead is green. Threaded hole for 1/2 in. conduit connector. Accepts 1/2 in. EMT fittings.
Maximum inlet air pressure	30 psig (345 kPa). Clean, dry, oil free air is required (reference EN-123).
Air connections	For 1/4 in. compression fittings. Three compression fittings (PKG-1141) for 1/4 in. plastic tubing supplied with each valve. N.C., Normally closed, Port 2. N.O., Normally open, Port 3. COM, Common, Port 1.
Valve outputs	
Flow capacity	1020 scim (278 mL/sec) at 15 psig (103 kPa) supply with 1 psig (6.9 kPa) drop.
Environment	
Ambient temperature limits	Shipping: -40 to 150°F (-40 to 65°C). Operating: 32 to 130°F (0 to 54°C). Supply air: 40 to 130°F (4 to 54°C).
Humidity	5 to 95% RH, non-condensing.
Location	NEMA Types 1, 2, 3, 3S, 4, and 4X.
Dimensions	4-5/16 H x 3-7/16 W x 1-5/8 D in. (110 x 87 x 43 mm).

Accessories

Model No.	Description
AL-196	Compression fitting for 1/4 in. metal tubing (18 per package).
PKG-1141	Compression fitting for 1/4 in. plastic tubing.

Typical Applications

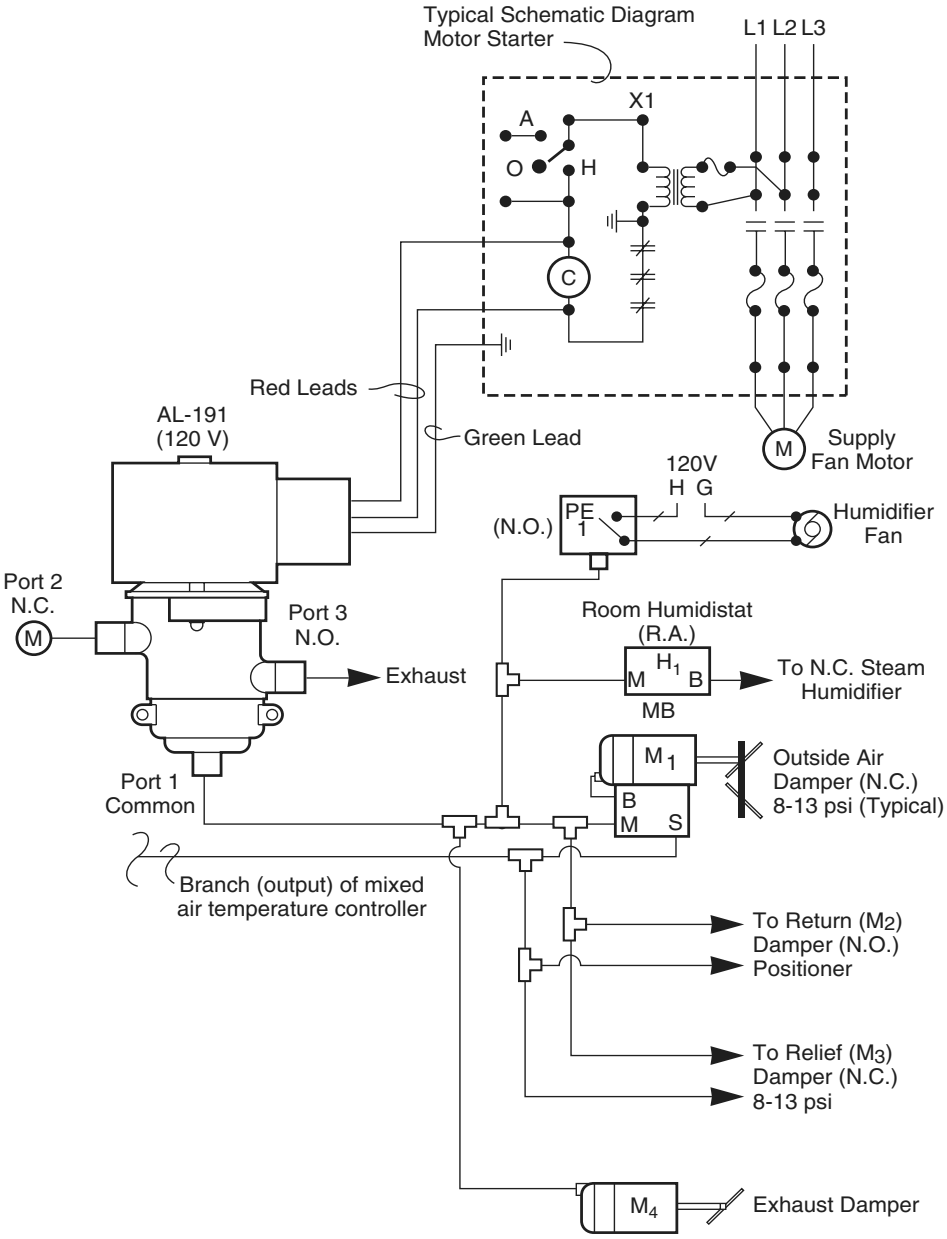

Figure 1 Typical Application Wiring Diagram.
(Air-Handling Unit Application)

Pressure Gauges

Pressure gauges for continuous indication of air pressure in pneumatic control systems.

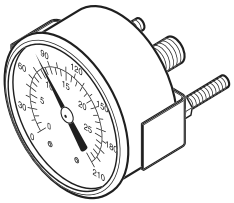

AL-323 Shown

Features:

- Permits readout of main air pressure and/or output pressures of pneumatic control components.
- 0 to 100 (0 to 700 kPa) and 0 to 30 psig (0 to 200 kPa or 0 to 210 kPa) models available.
- Available in flush-mounted or stem-mounted models.

Model Chart

Model No.	Mounting	Dial Diameter in. (mm)	Range psig (kPa)[a]
AL-322	Back connection	2 (51)	0 to 30 (0 to 200)
AL-323	Panel (flush)		0 to 30 (0 to 210)
AL-327	Back connection		0 to 100 (0 to 689)
AL-353	Panel (flush)	3-1/2 (89)	0 to 30 (0 to 210)
AL-362	Back connection	1-1/2 (38)	0 to 30 (0 to 200)

[a] Gauges are dual scaled.

Specifications

Air pressure	Refer to Model Chart.
Accuracy	Within 2% of total scale range in middle half of scale and 3% elsewhere.
Construction	
Case	Rust resistant steel.
Dial scale	
Numerical intervals	5 and 10 psi (30, 50 and 100 kPa).
Graduation marks	1 psi (5 or 10 kPa) for 0 to 30 psi (0 to 200 kPa or 0 to 210 kPa) and 2 psi (20 kPa) for 0 to 100 (0 to 700 kPa).
Ambient limits	
Shipping temperatures	-40 to 150°F (-40 to 65°C).
Operating temperatures	-20 to 150°F (-29 to 65°C).
Humidity	5 to 95% RH, non-condensing.
Air connections	Back connection 1/8 in. MNPT.
Flush panel mounting	AL-323, 2-1/8 in. (54 mm) dia. hole required; AL-353, 3-3/4 in. (95 mm) dia. hole required.
Dial dimensions	Refer to Model Chart.

Unit Ventilator Sub-Panels

Pneumatic unit ventilator sub-panels provide plug-in wiring of the various controls.

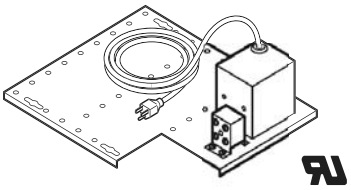

AL-7121

Features:

- Several different sub-panel assemblies, for use with unit-ventilators, provide standardized plug-in wiring of:
  - P.E. switches.
  - Electrical low-limit thermostats with manual or automatic-reset.
  - Solenoid air valve (E.P. Relay).

Model Chart

Model No.	Quantity of Items on Sub-Panel			
	PC-151 P.E. Switch (DPDT)	TC-5231 Low Temp. Thermostat Automatic Reset	TC-5241 Low Temp. Thermostat Manual Reset	Solenoid Air Valve
AL-7111	1	—	—	1
AL-7112	1	1	—	1
AL-7115	1	—	1	1
AL-7121	—	—	—	1

Specifications

Typical Controls	Pressure electric switches, solenoid air valves and low temperature thermostats.
Panel Dimensions	9-7/8 L x 6-7/8 W in. (251 x 175 mm). Note: Height is determined by the controls mounted to the panel.

Accessories

Model No.	Description
TOOL-095-1	Pneumatic calibration tool kit.

Thermostat Covers

These thermostat covers are designed for use with 2 x 2 in. pneumatic controls only. All covers are supplied with a concealed setpoint adjustment cover (factory installed on the -403, -404, and -407 models).

The CTR-xx universal replacement cover kit includes a factory assembled standard cover with °F thermometer, setpoint, and three inserts for field configuration (Barber-Colman only).

Features:

- Small size: approximately 2 x 2 in. (51 x 51 mm).
- Clean, attractive appearance.
- Metal and ABS plastic models available.
- Designed to allow room air to move easily over sensing element.
- Concealed or exposed adjustment, thermometer, and setpoint.

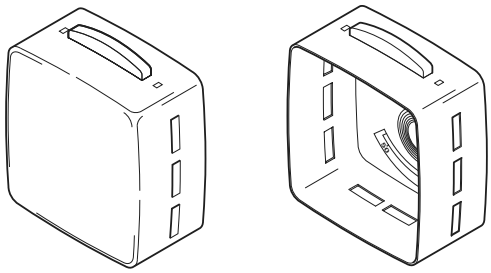

Blank Cover with Internal Thermometer and Concealed Adjustment

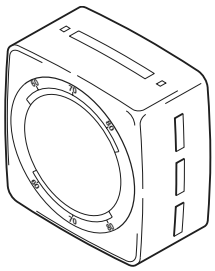

Full Cover with External Thermometer and Exposed Adjustment

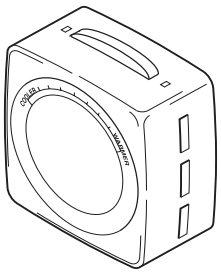

Full Cover (Visible Setpoint) with Internal Thermometer and Concealed Adjustment

Model Chart

TAC Thermostat Covers with Robertshaw Logo.

Cover Model No.	Dial Markings	Cover Type				Adjustment	Thermometer
		Full	Blank	Color	Material		
C1-42	55 to 85°F	X	—	Satin-chrome paint	Metal	Exposed	None
C1-43		X	—	Brushed aluminum			
C1-46		X	—	Gray	Plastic		
C1-47		X	—	Beige			
C3-42	55 to 85°F	X	—	Satin-chrome paint	Metal	Exposed	External
C3-43		X	—	Brushed aluminum			
C3-46		X	—	Gray	Plastic		
C3-47		X	—	Beige			
C4-42	55 to 85°F	X	—	Satin-chrome paint	Metal	Concealed	External
C4-43		X	—	Brushed aluminum			
C4-46		X	—	Gray	Plastic		
C4-47		X	—	Beige			
C5-42	Cooler-Warmer	X	—	Satin-chrome paint	Metal	Exposed	None
C5-46		X	—	Gray	Plastic		
C5-47		X	—	Beige			
C6-42		X	—	Satin-chrome paint	Metal		External
C6-43		X	—	Brushed aluminum			
C6-46		X	—	Gray	Plastic		
C6-47		X	—	Beige			
C11-42	None (Concealed Adjustment)	Thermometer only, concealed adjustment		Satin-chrome paint	Metal	Concealed	External
C11-43				Brushed aluminum			
C11-46				Gray	Plastic		
C11-47				Beige			
C3X62	10 to 30°C	X	—	Satin-chrome paint	Metal	Exposed	External
C4X62	10 to 30°C (Concealed Adjustment)	X	—	Satin-chrome paint	Metal	Concealed	External

Thermostats for use with Robertshaw Logo Thermostat Covers.

Cover Model No.	T12	T13	T18	T19	T23	T24	T27	T32	T33	T34	T35	T36
C1-42	X	X	X	X	X	X	X	X	X	—	—	—
C1-43	X	X	X	X	X	X	X	X	X	—	—	—
C1-46	X	X	X	X	X	X	X	X	X	—	—	—
C1-47	X	X	X	X	X	X	X	X	X	—	—	—
C3-42	X	X	X	X	X	X	X	X	X	—	—	—
C3-43	X	X	X	X	X	X	X	X	X	—	—	—
C3-46	X	X	X	X	X	X	X	X	X	—	—	—
C3-47	X	X	X	X	X	X	X	X	X	—	—	—
C4-42	X	X	X	X	X	X	X	X	X	—	—	—
C4-43	X	X	X	X	X	X	X	X	X	—	—	—
C4-46	X	X	X	X	X	X	X	X	X	—	—	—
C4-47	X	X	X	X	X	X	X	X	X	—	—	—
C5-42	X	X	X	X	X	X	X	X	X	—	—	—
C5-46	X	X	X	X	X	X	X	X	X	—	—	—
C5-47	X	X	X	X	X	X	X	X	X	—	—	—
C6-42	X	X	X	X	X	X	X	X	X	—	—	—
C6-43	X	X	X	X	X	X	X	X	X	—	—	—
C6-46	X	X	X	X	X	X	X	X	X	—	—	—
C6-47	X	X	X	X	X	X	X	X	X	—	—	—
C11-42	X	X	X	X	X	X	X	X	X	X	X	X
C11-43	X	X	X	X	X	X	X	X	X	X	X	X
C11-46	X	X	X	X	X	X	X	X	X	X	X	X
C11-47	X	X	X	X	X	X	X	X	X	X	X	X
C3X62	X	X	X	X	X	X	X	X	X	—	—	—
C4X62	X	X	X	X	X	X	X	X	X	—	—	—

TAC Wholesale Thermostat Covers with Robertshaw Logo.

Cover Model No.	Dial Markings	Cover Type				Adjustment	Thermometer
		Full	Blank	Color	Material		
21-923	55 to 85°F	X	—	Satin-chrome paint	Metal	Exposed	None
22-923		X	—	Gray	Plastic		
22-823		X	—	Beige			
21-928	None (No company identification)	—	X	Satin-chrome paint	Metal	Concealed	None
22-928		—	X	Gray	Plastic		
22-828		—	X	Beige			
21-933	55 to 85°F	X	—	Satin-chrome paint	Metal	Exposed	External
22-933		X	—	Gray	Plastic		
22-833		X	—	Beige			
21-939	55 to 85°F	X	—	Satin-chrome paint	Metal	Concealed	External
22-939		X	—	Gray	Plastic		
22-839		X	—	Beige			
21-943	Cooler-Warmer	X	—	Satin-chrome paint	Metal	Exposed	None
21-943		X	—	Gray	Plastic		
22-843							
21-948	Cooler-Warmer (Marks for 55 to 85°F)	X	—	Satin-chrome paint	Metal	Exposed	External
21-957	None	Thermometer only, concealed adjustment		Satin-chrome paint	Metal	Concealed	External
22-957				Gray	Plastic		
22-857				Beige			
21-960	None	—	X	Satin-chrome paint	Metal	Concealed	Internal
22-960		—	X	Gray	Plastic		
2890-010[a]	55 to 85°F or blank	X	—	Satin-chrome paint	Metal	Exposed	External
2890-011 [a]		X	—	Gray	Plastic		
2890-012 [a]		X	—	Euro-white			

[a] Includes a 21-933 full dial, a blank face plate, and 21-800 setpoint adjustment cover.

Thermostats for use with Wholesale Robershaw Logo Thermostat Covers.

Cover Model No.	T12	T13	T18	T19	T23	T24	T27	T32	T33	T34	T35	T36
21-923	X	X	X	X	X	X	X	X	X	—	—	—
22-923	X	X	X	X	X	X	X	X	X	—	—	—
22-823	X	X	X	X	X	X	X	X	X	—	—	—
21-928	X	X	X	X	X	X	X	X	X	—	—	—
22-928	X	X	X	X	X	X	X	X	X	—	—	—
22-828	X	X	X	X	X	X	X	X	X	—	—	—
21-933	X	X	X	X	X	X	X	X	X	—	—	—
22-933	X	X	X	X	X	X	X	X	X	—	—	—
22-833	X	X	X	X	X	X	X	X	X	—	—	—
21-939	X	X	X	X	X	X	X	X	X	—	—	—
22-939	X	X	X	X	X	X	X	X	X	—	—	—
22-839	X	X	X	X	X	X	X	X	X	—	—	—
21-943	X	X	X	X	X	X	X	X	X	—	—	—
21-948	X	X	X	X	X	X	X	X	X	—	—	—
22-943	X	X	X	X	X	X	X	X	X	—	—	—
22-843	X	X	X	X	X	X	X	X	X	—	—	—
21-957	X	X	X	X	X	X	X	X	X	X	X	X
22-957	X	X	X	X	X	X	X	X	X	X	X	X
22-857	X	X	X	X	X	X	X	X	X	X	X	X
21-960	X	X	X	X	X	X	X	X	X	X	—	—
22-960	X	X	X	X	X	X	X	X	X	X	—	—
2890-010[a]	X	X	X	X	X	X	X	X	X	—	—	—
2890-011 [a]	X	X	X	X	X	X	X	X	X	—	—	—
2890-012 [a]	X	X	X	X	X	X	X	X	X	—	—	—

[a] Includes a 21-933 full dial, a blank face plate, and 21-800 setpoint adjustment cover.

TAC Thermostat Covers with Barber-Colman Logo.

Cover Model No.	Dial Markings	Cover Type				Adjustment	Thermometer
		Full	Blank	Color	Material		
CT-21-400	55 to 85°F	X	—	Satin-chrome paint	Metal	Exposed (Adjustment cover shipped loose)	None
CT-12-400		X	—	Gray	Plastic		
CT-11-400		X	—	Beige			
CT-21-000	55 to 85°F	X	—	Satin-chrome paint	Metal	Exposed (Adjustment cover shipped loose)	External
CT-12-000		X	—	Gray	Plastic		
CT-11-000		X	—	Beige			
CT-21-421	Cooler-Warmer	X	—	Satin-chrome paint	Metal	Exposed (Adjustment cover shipped loose)	None
CT-21-420	Cooler-Warmer	X	—	Satin-chrome paint	Metal	Exposed (Adjustment cover shipped loose)	External
CT-21-403	None	Thermometer only, concealed adjustment		Satin-chrome paint	Metal	Concealed	External
CT-12-403				Gray	Plastic		
CT-11-403				Beige			
CT-21-407	None	—	X	Satin-chrome paint	Metal	Concealed	Internal
CT-12-407		—	X	Gray	Plastic		
CT-11-407		—	X	Beige			
CT-21-404	None	—	X	Satin-chrome paint	Metal	Concealed	None
CT-12-404		—	X	Gray	Plastic		
CT-11-404		—	X	Beige			
CT-21-116	10 to 30°C	X	—	Satin-chrome paint	Metal	Exposed (Adjustment cover shipped loose)	External

Thermostats for use with Barber-Colman Logo Thermostat Covers.

Cover Model No.	T12	T13	T18	T19	T23	T24	T27	T32	T33	T34	T35	T36
CT-21-400	X	X	X	X	X	X	X	X	X	—	—	—
CT-12-400	X	X	X	X	X	X	X	X	X	—	—	—
CT-11-400	X	X	X	X	X	X	X	X	X	—	—	—
CT-21-000	X	X	X	X	X	X	X	X	X	—	—	—
CT-12-000	X	X	X	X	X	X	X	X	X	—	—	—
CT-11-000	X	X	X	X	X	X	X	X	X	—	—	—
CT-21-421	X	X	X	X	X	X	X	X	X	—	—	—
CT-21-420	X	X	X	X	X	X	X	X	X	—	—	—
CT-21-403	X	X	X	X	X	X	X	X	X	X	X	X
CT-12-403	X	X	X	X	X	X	X	X	X	X	X	X
CT-11-403	X	X	X	X	X	X	X	X	X	X	X	X
CT-21-407	X	X	X	X	X	X	X	X	X	X	—	—
CT-12-407	X	X	X	X	X	X	X	X	X	X	—	—
CT-11-407	X	X	X	X	X	X	X	X	X	X	—	—
CT-21-404	X	X	X	X	X	X	X	X	X	X	X	X
CT-12-404	X	X	X	X	X	X	X	X	X	X	X	X
CT-11-404	X	X	X	X	X	X	X	X	X	X	X	X
CT-21-116	X	X	X	X	X	X	X	X	X	—	—	—

TAC Blank Thermostat Covers (No Logo)

Cover Model No.	Dial Markings	Cover Type				Adjustment	Thermometer
		Full	Blank	Color	Material		
C2-42	None	—	X	Satin-chrome paint	Metal	Concealed	None
C2-43		—	X	Brushed aluminum			
C2-46		—	X	Gray	Plastic		
C2-47		—	X	Beige			
C10-42	20 to 90% RH	X	—	Satin-chrome paint	Metal	Exposed	None
C10-46		X	—	Gray	Plastic		
C13-42	Cooler-Warmer	X	—	Satin-chrome paint	Metal	Exposed	None
C14-42	None	—	X	Satin-chrome paint	Metal	Concealed	Internal
C14-43		—	X	Brushed aluminum			
C14-46		—	X	Gray	Plastic		
C14-47		—	X	Beige			
C15-42[a]	None	—	X	Satin-chrome paint	Metal	Exposed	None
C3X42	10 to 30°C	X	—	Satin-chrome paint	Metal	Exposed	External
C4X42	10 to 30°C	X	—	Satin-chrome paint	Metal	Concealed	External
C6X42	Cooler-Warmer (marks for 10 to 30°C)	X	—	Satin-chrome paint	Metal	Exposed	External

[a] C15 has special holes for exhaust air for H53 or can be used as blank cover for H18.

Thermostats for use with Blank Thermostat Covers (No Logo).

Cover Model No.	T12	T13	T18	T19	T23	T24	T27	T32	T33	T34	T35	T36	H18	H53	T46x
C2-42	X	X	X	X	X	X	X	X	X	X	X	X	—	—	—
C2-43	X	X	X	X	X	X	X	X	X	X	X	X	—	—	—
C2-46	X	X	X	X	X	X	X	X	X	X	X	X	—	—	—
C2-47	X	X	X	X	X	X	X	X	X	X	X	X	—	—	—
C10-42	—	—	—	—	—	—	—	—	—	—	—	—	X	—	—
C10-46	—	—	—	—	—	—	—	—	—	—	—	—	X	—	—
C13-42	—	—	—	—	—	—	—	—	—	—	—	—	—	—	X
C14-42	X	X	X	X	X	X	X	X	X	X	—	—	—	—	—
C14-43	X	X	X	X	X	X	X	X	X	X	—	—	—	—	—
C14-46	X	X	X	X	X	X	X	X	X	X	—	—	—	—	—
C14-47	X	X	X	X	X	X	X	X	X	X	—	—	—	—	—
C15-42	—	—	—	—	—	—	—	—	—	—	—	—	X	X	—
C3X42[a]	X	X	X	X	X	X	X	X	X	—	—	—	—	—	—
C4X42	X	X	X	X	X	X	X	X	X	—	—	—	—	—	—
C6X42	X	X	X	X	X	X	X	X	X	—	—	—	—	—	—

[a] C15 has special holes for exhaust air for H53 or can be used as blank cover for H18.

Accessories

Model No.	Wholesale Model No.	Description
N2-4	21-881	1/16 in. hexhead wrench for thermostat calibration (also for calibration of P341-, P541 and P541-RA Receiver-Controllers.

Room Humidistat

The pneumatic room humidistat is a proportioning-type device designed to control pneumatic valves or damper actuators associated with heating or cooling coils, humidifiers, air washers, or other humidifying or dehumidifying equipment to maintain constant relative humidity. This device uses a highly sensitive hygroscopic nylon ribbon and a pilot bleed relay with pneumatic feedback. Throttling range, action (direct or reverse), and setpoint are easily adjusted by graduated dials. Internal limit stops are available to restrict adjustment range when required.

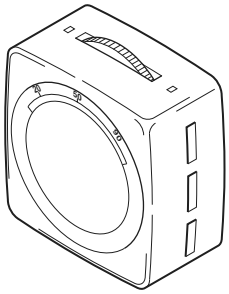

Features:

- Attractive appearance (various metal or ABS plastic covers available).
- Factory calibrated. S.S. ball-in-seat provides pneumatic feedback for linear, stable operation.
- Leakproof, O-Ring-sealed, spring-loaded self-closing branch gauge tap.
- Easy manual changeover from reverse to direct action, and vice versa.

Model Chart

Model No.	Wholesale Model No.	Description
H18-301	2230-018[a]	Refer to Specifications.

[a] Includes cover, (2) 1/4” x 3/16” reducers, 6” piece of plastic tubing, mounting plate, and wall plate.

Specifications

Action	Proportional: factory set for reverse action, adjustable for direct action.
Setpoint range	20 to 90% RH.
Throttling range	5 to 15%/12 psi adjustable, factory set 10%.
Construction	
Element	Hygroscopic nylon.
Components	Die cast aluminum, stainless steel, and glass-filled nylon.
Diaphragms	Fabric-reinforced neoprene.
Air filter	Internal.
Maximum ambient temperature	140°F (60°C).
Supply air pressure	Clean, dry, oil free air required (Refer to EN-123).
Nominal	20 psig (138 kPa).
Minimum	16 psig (110 kPa).
Maximum	30 psig (207 kPa).
Connections	For spring-reinforced 3/16 in. plastic tubing and required fittings (order separately).
Calibration point	9 psig branch line pressure when ambient humidity equals setpoint.
Setpoint adjustment	Serrated thumb wheel. May be concealed with 10-72 adjustment cover (order separately).
Cover	Included with Humidistat.
Scale	20 to 90%.
Finish	Satin chrome painted aluminum.
Air consumption	17 scim (4.6 mL/s); 19 scim (RA) (5.2 mL/s).

Specifications (Continued)

Mounting	Upright position on wall.
Dimensions	2-1/32 H x 2-1/32 W x 1-3/8 D in. (52 x 52 x 35 mm).

Accessories

Model No.	Wholesale Model No.	Description
6-371	20-642	Mounting ring (use with mounting heads).
10-50	20-705	Wall Plate.
10-53	20-707	Metal thermostat guard.
10-57	20-710	Mortar joint fitting, two tube, copper.
10-58	20-711	Mounting ring (use with N5-52).
10-59	20-712	Internal stop kit.
10-62	20-715	Thermostat guard, clear Lexan®.
10-63	20-716	Insulating backplate, for plastic guards.
10-64	—	Tubing assembly with eyelets and fittings.
10-66	21-468	Mortar joint fitting, two “FR” tubes.
10-72	21-800	Concealed adjustment cover (black), for metal covers.
10-73	21-473	Drywall mounting fitting (snap-in).
10-76	21-876	Thermostat guard, opaque ABS.
10-77	20-714	Adaptor plate.
10-78	—	Insulating backplate.
10-80	—	Concealed adjustment cover, for use with gray ABS cover.
10-82	20-850	Mounting plate for 2 x 4 switch box, Black.
10-82-SS	—	Stainless steel mounting plate.
10-82-47	—	Beige mounting plate.
10-82-48	—	Euro-white mounting plate.
C10-42	21-955	Replacement cover. No logo.
C10-46	—	Replacement cover. No logo.
C15-42	—	Replacement cover. No logo.
MCS-GA	22-138	Gauge tap adaptor.
N2-4	20-881	Calibration tool for thermostats, (and P341, P541 and P541-RA).
N5-49	21-065	Adaptor (for use with N5-53).
N5-50	21-067	Duct mounting box.
N5-52	21-068	Bracket, drywall mount (use with 10-58 mounting pin).
N5-53	21-069	Bracket, stud mount rough-in.
N5-95	—	Wall thermostat conversion kit.

Typical Applications

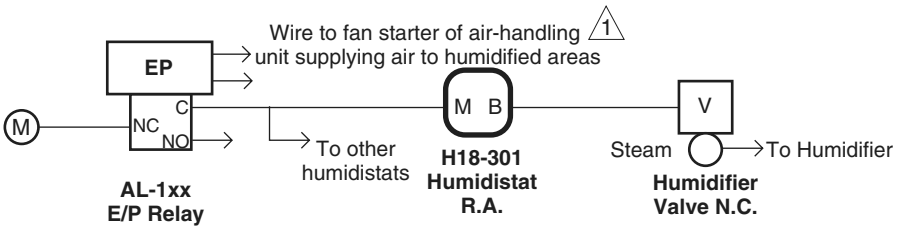

1 When air-handling unit supply fan is running, EP relay passes main air to humidistats, allowing them to operate normally-closed humidifier steam valves. When fan is de-energized, EP relay removes main air from humidistats, closing humidifier valves.

Figure 1 Typical Humidistat Application.

Room Humidity Transmitter

Humidity Transmitter measures room humidity and transmits a proportional pneumatic signal to a calibrated receiver gauge and/or receiver controller. The device is factory set to transmit a 3 to 15 psig signal over a 30 to 80% RH range.

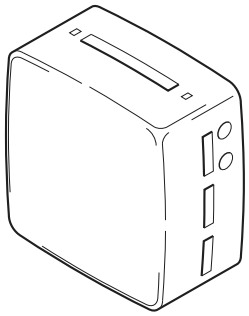

H53-301

Features:

- Highly sensitive nylon sensing element, temperature-compensated.
- Linear response to room relative humidity changes.
- Stable, force-balance operation.
- Small size, attractive appearance.
- Shipped with specially-vented cover.
- Matches appearance of T-Series 2 x 2 in. Thermostats, H18-301 Humidistat, and T53-101 Temperature Transmitter.

Model Chart

Model No.	Wholesale Model No.	Description
H53-301	2232-053[a]	Refer to Specifications.

[a] Includes blank cover, wall plate, (1) 1/4” x 3/16” reducer, 6” piece of plastic tubing and mounting plate.

Specifications

Action	Direct acting, proportional.
Humidity range	30 to 80% RH, non-adjustable.
Construction	
Element	Hygroscopic nylon ribbon.
Components	Die cast aluminum, stainless steel, and glass-filled nylon.
Diaphragms	Fabric-reinforced neoprene.
Air filter	Internal.
Maximum ambient temperature	140°F (60°C).
Supply air pressure	Clean, dry, oil free air required (refer. EN-123).
Nominal	20 psig (138 kPa).
Maximum	30 psig (207 kPa).
Connections	For spring-reinforced 3/16 in. plastic tubing and required fittings (order separately).
Calibration point	Refer to Figure 1.
Cover	Blank, provided with transmitter.
Scale	None.
Finish	Satin chrome painted aluminum.
Mounting	Upright position on wall.
Dimensions	2-1/32 H x 2-1/32 W x 1-3/8 D in. (52 x 52 x 35 mm).
Air consumption	29 scim (7.9 mL/s).

Accessories

Model No.	Wholesale Model No.	Description
6-371	20-642	Mounting ring (use with mounting heads).
10-53	20-707	Metal thermostat guard.
10-57	20-710	Mortar joint fitting, two tube, copper.
10-58	20-711	Mounting ring (for use with N5-52).
10-59	20-712	Internal stop kit.
10-62	20-715	Thermostat guard, clear Lexan®.
10-63	20-716	Insulating backplate for plastic guards.
10-64	—	Tubing assembly with eyelets and fittings.
10-66	21-468	Mortar joint fitting, two “FR” tubes.
10-72	21-800	Concealed adjustment cover (black), for metal covers.
10-73	21-473	Drywall mounting fitting (snap-in).
10-76	21-876	Thermostat guard, opaque ABS.
10-77	20-714	Adaptor plate.
10-78	—	Insulating backplate.
10-80	21-964	Concealed adjustment cover, for use with gray ABS cover.
10-82	—	Mounting plate for 2 x 4 switch box, black.
10-82-SS	—	Stainless steel mounting plate.
10-82-47	—	Beige mounting plate.
10-82-48	—	Euro-white mounting plate.
C15-42	—	Replacement cover. No logo.
MCS-GA	22-138	Gauge tap adaptor.
N2-4	20-881	Calibration tool for thermostats, (and P341, P541 and P541-RA).
N4-32	20-944	Restrictor tee, copper tubing.
N5-49	21-065	Adaptor (for use with N5-53).
N5-52	21-068	Bracket, drywall mount (use with 10-58 mounting ring).
N5-53	21-069	Bracket, stud mount rough-in.
N100-0010	21-038	0.017 scfm restrictor tee, red plastic.
N100-2501	21-153	In-line 0.017 scfm restrictor, red plastic.

Typical Applications

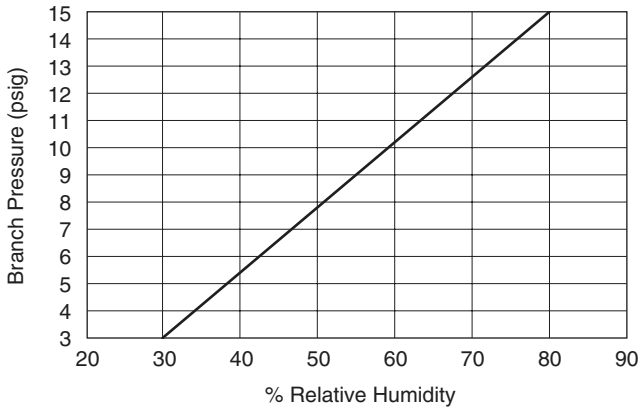

Figure 1 Relative Humidity vs. Branch Pressure.

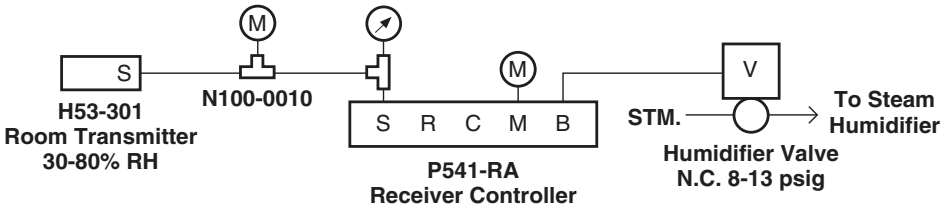

1 H53-301 is wall-mounted, in the room to measure area relative humidity.

Figure 2 Typical Application H53-301 Room Transmitter.

Duct Relative Humidity Transmitter

The Relative Humidity Transmitter is designed to measure relative humidity in an air duct and to transmit a 3 to 15 psig pneumatic signal over its 0 to 100% R.H. span to remote controlling, indicating, and alarm devices such as receiver-controllers, receiver gauges, and sensitive pressure switches.

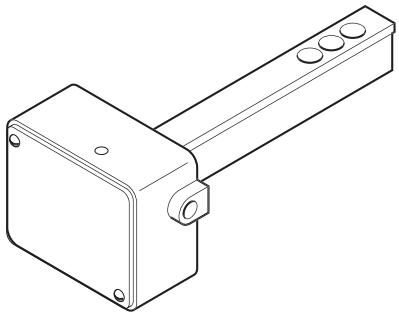

Features:

- Widest possible (0 to 100%) relative humidity range for 3 to 15 psig (20.7 to 103.4 kPa) output.
- Shielded, highly sensitive, temperature-compensated nylon sensing element, designed for duct insertion.
- Force-balance pneumatic feedback for stable, repeatable operation.

Model Chart

Model No.	Wholesale Model no.	Description
H150-100	2232-150	Refer to Specifications.

Specifications

Control action	Direct acting, proportional.
Ambient temperature limit	140°F (60°C).
Humidity range	0 to 100% R.H.
Air pressure	
Operating	20 psig (138 kPa).
Maximum	30 psig (207 kPa).
Construction	
Element	Hygroscopic nylon tape sensing element.
Housing	Die cast aluminum.
Dimensions	
Case	2-5/8 H x 2-1/16 W x 1-3/4 D in. (67 x 78 x 44 mm).
Element	1-5/16 H x 7/8 W x 5-5/8 D in. (33 x 22 x 143 mm).
Weight	0.9 lb (0.4 kg).
Air consumption	29 scim (7.9 mL/s).

Accessories

Model No.	Wholesale Model No.	Description
N4-32	20-944	Restrictor tee, copper tubing.
N100-0010	21-038	Restrictor tee, polyethylene tubing.
N100-2501	21-153	In-line restrictor.

Typical Applications

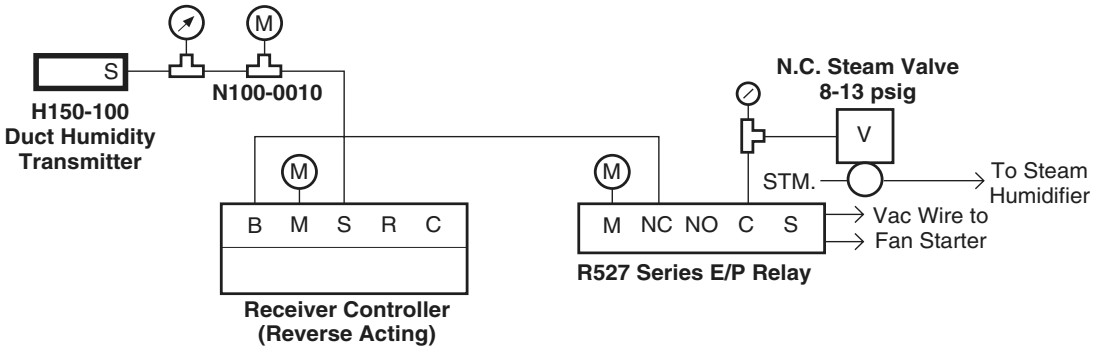

1 H150-100 is usually located in the return (or exhaust) air duct, to measure space relative humidity.

2 When the air-handling unit fan motor is de-energized, the E/P relay removes control air from the normally closed steam valve, closing it fully.

Figure 1 Typical Applications.

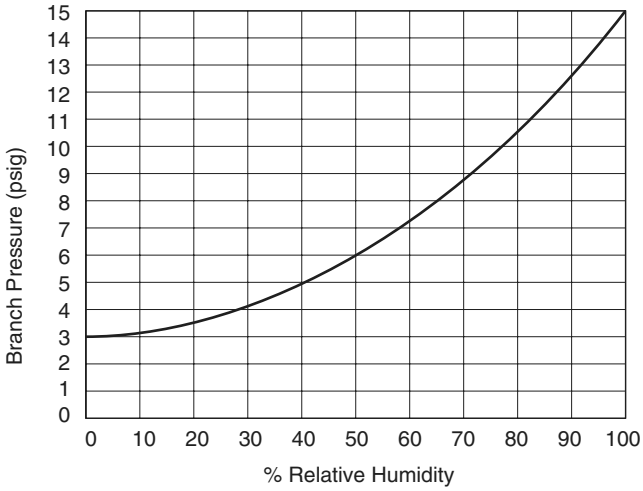

Figure 2 Relative Humidity vs. Branch Pressure.

Room/Duct Humidity Transmitters

For proportional humidity control used with RKS Series receiver-controllers. May be used with calibrated gauges for continuous humidity indication at any local or remote position.

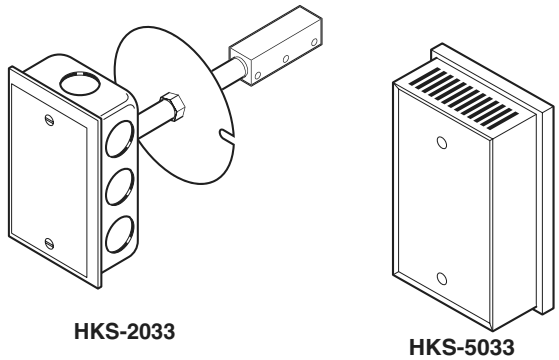

HKS-2033 HKS-5033

Features:

HKS-2033

- 10 to 90% relative humidly range for 3 to 15 psig (20.7 to 103.4 kPa) output.
- Highly sensitive nylon sensing element, designed for duct insertion.
- Pneumatic feedback for stable, repeatable operation.

HKS-5033

- 10 to 90% relative humidity range for 3 to 15 psig (20.7 to 103.4 kPa) output.
- Highly sensitive nylon sensing element, designed for wall-mounting.
- Pneumatic feedback for stable, repeatable operation.
- Matches appearance of TK-Series thermostats.

Model Chart

Model No.	Description
HKS-2033	Duct humidity transmitter.
HKS-5033	Room humidity transmitter.

Specifications

Sensing element	Nylon.
Sensing	
Span	80% RH.
Range	10 to 90% RH (non-adjustable).
Output air signal	3 to 15 psig (21 to 103 kPa).
Action	Direct.
Ambient limits	
Shipping	-40 to 150°F (-40 to 65°C). 0 to 98% RH, non-condensing.
Operating	-20 to 125°F (-29 to 52°C). 10 to 98% RH, non-condensing. 10 to 2500 fpm (0.05 to 12.7 m/s) sensed air velocity.
Supply air pressure	Clean, oil free, dry air required (reference EN-123).
Nominal	20 psig (138 kPa) through 0.0075 in. (190 µm) restrictor.
Minimum	18 psig (124 kPa).
Maximum	30 psig (207 kPa).
Air connections	
HKS-2033	Barbed for 1/4 in. O.D. plastic tubing.
HKS-5033	5/32 in. diameter spring reinforced plastic tubing.
Air consumption for sizing air compressor	41.5 scim (11.3 mL/s).
Air capacity for sizing air mains	48 scim (13.2 mL/s).

Specifications (Continued)

Mounting	
HKS-2033	Duct.
HKS-5033	Wall (has beige plastic cover).
Dimensions	
HKS-2033	4-3/16 H x 4 W x 2-1/16 D in. (106 x 102 x 52 mm); tube mounting hole diameter is 1-3/8 in. (35 mm) and tube insertion length is 4-1/4 in. (108 mm).
HKS-5033	4-3/8 H x 2-3/4 W x 1-5/8 D in. (111 x 70 x 43 mm). Order fittings separately for type of wall construction.

Accessories

Model No.	Description
AKS-1189	Accessory scale plate, +/- 8% RH for HKS-2033, HKS-5033.
AKS-1199	Accessory scale plate, +/- 2” water for HKS-2033, HKS-5033.
AT-504	Plaster hole cover (small).
AT-505	Surface mounting base.
AT-506	Pneumatic wall box fitting (two tubes) used for mounting AT-532-111-1-01 under cover of HKS-5033.
AT-532-098-1-1	0.0075 restrictor (white).
AT-532-098-1-2	.005" restrictor (Red).
AT-532-098-1-3	.010" restrictor (Blue).
AT-532-111-1-01	0.0075 tee restrictor for 5/32 in. plastic tubing.
AT-532-111-1-03	0.010 tee restrictor for 5/32 in. plastic tubing.
AT-533-67	Adaptor 1/4 in. plastic tubing to 3/16 in. copper or 1/4 in. copper with 1/4 in. solder coupling (not included).
AT-533-101	Adaptor 1/4 in. plastic to 5/32 in. plastic.
AT-533-127	Adaptor 3/16 in. copper or 1/4 in. copper with 1/4 in. solder coupling (not included) to 5/32 in. plastic.
AT-533-129	5/32" x 5/32" Barbed brass connector.

Typical Applications

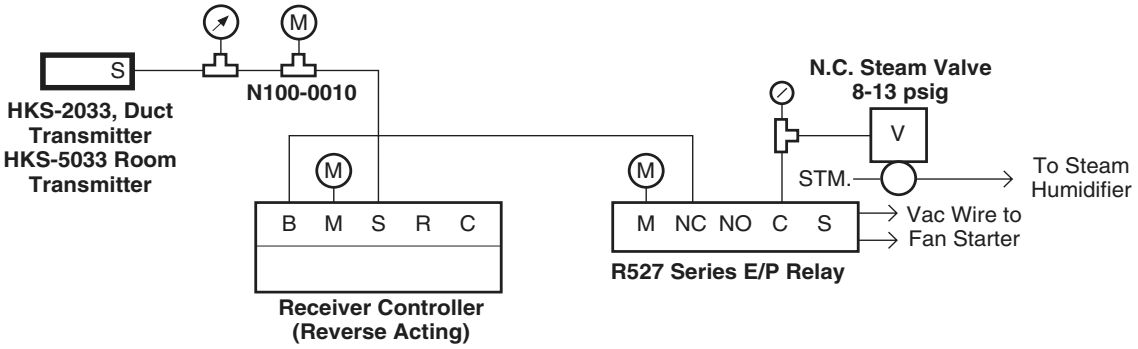

1 HKS-2033 is usually located in the return (or exhaust) air duct, to measure space relative humidity.

2 HKS-5033 is wall mounted, in the room, to measure area relative humidity.

3 When the air-handling unit fan motor is de-energized, the E/P relay removes control air from the normally closed steam valve, closing it fully.

Figure 1 Typical Application.

Duct Enthalpy Transmitter

For proportional enthalpy control used with receiver-controller. For differential enthalpy control, two HKS-8065 are used with AK-52101 to determine if return or outdoor air has the higher enthalpy. May be used with receiver-gauges for continuous enthalpy indication at any local or remote position.

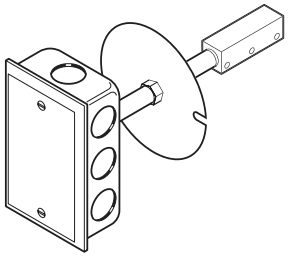

Features:

- Designed to sense total heat (enthalpy) in air ducts.
- Two highly sensitive sensing elements (nylon for relative humidity, bimetal for temperature) combine to produce 3 to 15 psig (20.7 to 103.4 kPa) output over the range of 16 to 40 BTU per pound of dry air (37 to 93 kj/kg).
- Sensing element designed for duct insertion.

Model Chart

Model No.	Description
HKS-8065	Duct humidity transmitter.

Specifications

Sensing element	Combination bimetal/nylon.
Sensing	
Span	24 btu/lb (56 KJ/Kg) dry air.
Range	16 to 40 btu/lb (37 to 93 KJ/Kg) dry air.
Output air signal	3 to 15 psig (21 to 103 kPa).
Action	Direct.
Ambient limits	
Shipping	-40 to 150°F (-40 to 65°C). 0 to 98% RH, non-condensing.
Operating	-20 to 125°F (-29 to 52°C). 10 to 98% RH, non-condensing. 10 to 2500 fpm (0.05 to 12.7 m/s) sensed air velocity.
Supply air pressure	Clean, oil free, dry air required (reference EN-123).
Nominal	20 psig (138 kPa) through 0.0075 in. (190 μm) restrictor.
Minimum	18 psig (124 kPa).
Maximum	30 psig (207 kPa).
Air connections	Barbed for 1/4 in. O.D. plastic tube.
Air consumption for sizing air compressor	41.5 scim (11.3 mL/s) at 20 psig (138 kPa) supply through a 0.0075 in. (190 μm) restrictor.
Air capacity for sizing air mains	48 scim (13.2 mL/s) when supplied by a 20 psig (138 kPa) supply air.
Mounting	Duct.
Dimensions	4-3/16 H x 4 W x 4 D in. (106 x 102 x 102 mm); tube mounting hole diameter is 1-3/8 in. (35 mm) and tube insertion length is 4-1/4 in. (108 mm).

Accessories

Model No.	Description
AT-532-098-1-1	0.0075 restrictor (white).
AT-532-098-1-2	0.005" restrictor (Red).
AT-532-098-1-3	0.010" restrictor (Blue).
AT-533-67	Adaptor 1/4 in. plastic tubing to 3/16 in. copper or 1/4 in. copper with 1/4 in. solder coupling (not included).

Typical Applications

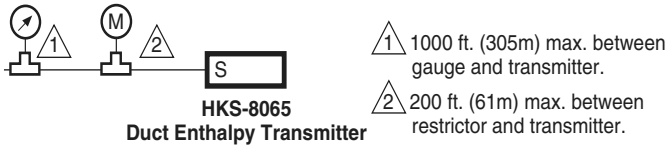

Figure 1 Typical Application.

Pressure Gauges

Pressure gauges for continuous indication of air pressure in pneumatic control systems.

Features:

- 0 to 30 psig models permit readout of main air pressure and/or output pressures of pneumatic control components.
- 0 to 160 psig models permit readout of pressure in air-compressor receivers or high-pressure main air lines.
- Available in flush-mounted, stem-mounted, bottom-mounted or lower-back mounted models.

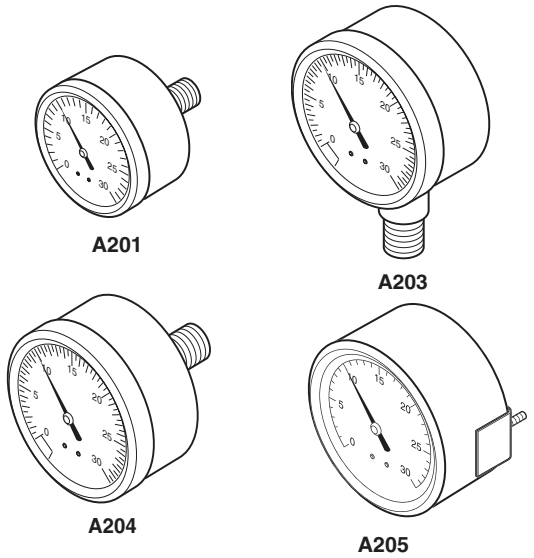

Model Chart

Model No.	Wholesale Model No.	Dial Size in. (mm)	Range (psi)	Mounting	Air Connection	Construction and Finish
A201	2420-001	1-1/2 (38)	0 to 30	Stem	1/8 in. MNPT center back	ABS plastic case and friction ring
A203	2420-002	2 (51)			1/8 in. MNPT bottom	
A204-3	2420-003				1/8 in. MNPT center back	
A204-4	2420-004		0 to 160			
A205-01	2420-005		0 to 30	Flush	1/4 in. barb back	Steel case; black enamel case with chrome plated brass rings
A205-02	2420-006		0 to 160		1/8 in. MNPT lower back	

Specifications

Gauge actuation	Phosphor bronze Bourdon tube through sturdy brass gears.
Flush panel mounting	A205 Series U-clamp mounting for 1/16 to 3/4 in. thickness panels.
Dimensions	
A201	1-42/64 x 1-1/2 in. (34 x 38 mm).
A203	1-15/32 x 1-3/32 in. (37 x 27 mm).
A204-3, A204-4	2-11/64 x 1-55/64 in. (55 x 28 mm).
A205-01, A205-02	2-1/4 x 1-53/64 in. (57 x 46 mm).

Typical Applications

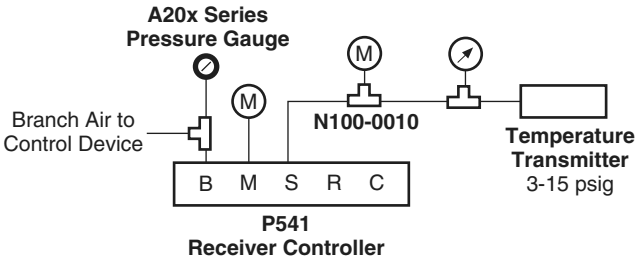

Figure 1 Typical Application.

Pneumatic Damper Actuators

These actuators are designed for use in pneumatic control systems to position air control dampers in response to signals from pneumatic controllers. The M556 is a large swivel-mounted actuator with an adjustable crank arm having a clamp to fit a 1/2 in. O.D. damper shaft.

The M570 Series damper actuators are used in pneumatic control systems to position automatic air dampers upon receipt of an air pressure signal from a control device. These actuators are equipped with right angle brackets and are adaptable to air conditioning, multi-zone, heating, ventilating, fan coil units, unit ventilators, mixing boxes, and VAV terminal boxes. M573 and M574 are also available as post-mounted actuators.

The M583 is used in classroom type unit ventilators. Special mounting kits are available for adapting the actuator to the various makes and models of classroom type units. The M584 is designed for use on large volume unit ventilators. An internal spring arrangement permits the actuator to operate gradually to a preset percentage of total stroke, hesitate for a preset pressure range, and then complete its full travel. When combined with other control devices, these actuators may be adjusted to perform as required by ASHRAE control cycles for unit ventilators.

Features:

- Rigid, corrosion-resistant glass-filled nylon bodies.
- M556, M573 and M574 have 303 stainless steel shafts.
- M556, M573 and M574 available with or without N800-0555 (2850-xxx) positioner.

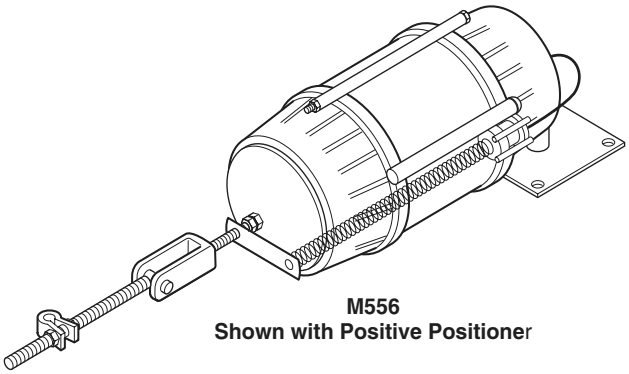

M556
Shown with Positive Positioner

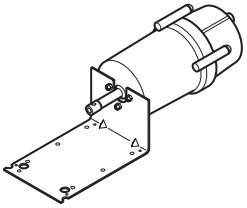

M572/M573/M574
Right Angle Mounted
Shown without Positive Positioner

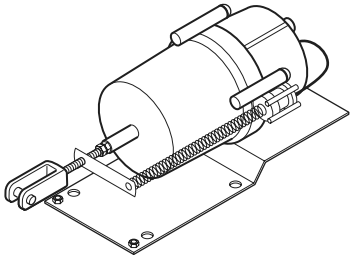

M573/M574
Post Mounted Actuator
Shown with N800-0555
Positive Positioner

Model Chart

2 in. Stroke (3 sq. in.).

Model No.	Spring Range psig	Mounting	Description
M572-2308	3 to 12	Right-angle	Actuator with ball joint to accept 5/16 in. push rod.
M572-2311			Actuator with complete linkage for 1/2 in. damper shafts.
M572-8308	4 to 8		Actuator with ball joint to accept 5/16 in. push rod.
M572-8311			Actuator with complete linkage for 1/2 in. damper shafts.
M572-3308	5 to 10		Actuator with ball joint to accept 5/16 in. push rod.
M572-3311			Actuator with complete linkage for 1/2 in. damper shafts.
M572-5308	8 to 13		Actuator with ball joint to accept 5/16 in. push rod.
M572-5311			Actuator with complete linkage for 1/2 in. damper shafts.
M572-6308	10 to 15		Actuator with ball joint to accept 5/16 in. push rod.
M572-6311			Actuator with complete linkage for 1/2 in. damper shafts.

Hesitation Actuator.

Model No.[a]	Stroke	Diaphragm Area	Spring Range psig	Mounting	Description
M583-0520	2 in.	7 sq. in.	1 to 4 and 8 to 12	Post-mtd.	Actuator with stamped clevis, clevis pin and bracket; for use on air handlers where factory mounting has not been established.
M584-0211	3 in.	11 sq. in.	1 to 4 and 8 to 13	Right-angle	Actuator with pushrod and stamped crankarm for 90° rotation of 1/2 in. damper shaft.

[a] Total stroke of these hesitation actuators takes place in two stages, from 1 to 4 and 8 to 12 (or 8 to 13) psig. No shaft movement from 4 to 8 psig.

3 in. Stroke (7 sq. in.).

Model No.	Spring Range psig	Mounting	Description
M573-2108	3 to 12	Right-angle	Actuator with ball joint to accept 5/16 in. push rod.
M573-2111		Right-angle	Actuator with complete linkage for 1/2 in. damper shafts.
M573-2520		Post-mtd.	Actuator with clevis and pin.
M573-8108	4 to 8	Right-angle	Actuator with ball joint to accept 5/16 in. push rod.
M573-8111			Actuator with complete linkage for 1/2 in. damper shafts.
M573-8520		Post-mtd.	Actuator with clevis and pin.
M573-3108	5 to 10	Right-angle	Actuator with ball joint to accept 5/16 in. push rod.
M573-3111			Actuator with complete linkage for 1/2 in. damper shafts.
M573-3520		Post-mtd.	Actuator with clevis and pin.
M573-1108	8 to 13	Right-angle	Actuator with complete linkage and positive positioner for 5/16 in. push rod and 1/2 in. damper shafts.
M573-1111			
M573-1520		Post-mtd.	Actuator with positive positioner.
M573-5108		Right-angle	Actuator with ball joint to accept 5/16 in. push rod.
M573-5111			Actuator with complete linkage for 1/2 in. damper shafts.
M573-5520		Post-mtd.	Actuator with clevis and pin.
M573-6108	10 to 15	Right-angle	Actuator with ball joint to accept 5/16 in. push rod.
M573-6111		Right-angle	Actuator with complete linkage for 1/2 in. damper shafts.
M573-6520		Post-mtd.	Actuator.

M556 Series (2466 Series), M572 Series (2472 Series), M573 Series (2473 Series), M574 Series (2474 Series)

4 in. Stroke (11 sq. in.).

Model No.	Spring Range psig	Mounting	Description
M574-2208	3 to 12	Right-angle	Actuator with ball joint to accept 5/16 in. push rod.
M574-2211			Actuator with complete linkage for 1/2 in. damper shafts.
M574-2520		Post-mtd.	Actuator with clevis and pin.
M574-8208	4 to 8	Right-angle	Actuator with ball joint to accept 5/16 in. push rod.
M574-8211			Actuator with 1/2 in. shaft linkage and bracket.
M574-8520		Post-mtd.	Actuator with clevis and pin.
M574-3208	5 to 10	Right-angle	Actuator with ball joint to accept 5/16 in. push rod.
M574-3211			Actuator with complete linkage for 1/2 in. damper shafts.
M574-3520		Post-mtd.	Actuator with clevis and pin.
M574-1054	8 to 13	Right-angle	Actuator for Keystone butterfly valve, w/positioner.
M574-1208			Actuator with complete linkage and positive positioner for 5/16 in. push rod and 1/2 in. damper shafts.
M574-1211			
M574-1520		Post-mtd.	Actuator with positive positioner.
M574-5208		Right-angle	Actuator with ball joint to accept 5/16 in. push rod.
M574-5211			Actuator with 1/2 in. shaft linkage and bracket.
M574-6208	10 to 15	Right-angle	Actuator with ball joint to accept 5/16 in. push rod.
M574-6211		Right-angle	Actuator with complete linkage for 1/2 in. damper shafts.
M574-6520		Post-mtd.	Actuator.

6 in. Stroke (24.8 sq. in.).

Model No.	Wholesale Model No.	Spring Range psig	Mounting	Description
M556-14		8 to 13	Swivel-mtd.	60° to 120° adj. linkage to accept 1/2 in. shafts w/positioner (with 5 psi span feedback spring).
M556-1402				w/Positioner, for Keystone butterfly valve.
M556-51				60° to 120° adjustable linkage to accept 1/2 in. shafts.
M556-5101	M556-5101			No linkage. Hole in end of shaft is tapped to receive a 3/8” - 16 machine screw.
M556-5102				For Keystone butterfly valve.

Specifications	
Construction	
Housing	Glass-filled nylon.
Diaphragm	Neoprene, rolling type.
Shaft	Stainless Steel on M556, M573, M574. Nickel plated steel on M572, M583, M584.
Stroke	Refer to Model Chart.
Spring	Retract actuator shaft on loss of air pressure.
Ambient temperature limits	-20 to 180°F (-29 to 82°C).
Supply air pressure	Clean, dry, oil free air required.
Nominal	20 psig (138 kPa). [M580 Series nominal 0 to 15 psig (0 to 103 kPa).]
Maximum	30 psig (207 kPa).
Air consumption (positioner models)	0.017 scfm.
Adjustments	
Hesitation stroke start point	4 psig (28 kPa); stroke adjustable 20% to 70% prior to 4 psig (M58X only).
Finish stroke start point	8 psig (55 kPa); stroke adjustable 80% to 30% after 8 psig (M58X only).
Connections	Barbed fitting for 1/4 in. O.D. plastic tubing.
Dimensions	
M556 Series	5-3/4 dia. x 17 L in. (146 x 432 mm).
M573 Series	3-3/4 dia. x 14 L in. (95 x 356 mm).
M574 Series	4-5/8 dia. x 15-1/8 L in. (117 x 384 mm).

Accessories

Model No.	Wholesale Model No.	Description
AM-112	—	Slotted crank arm for 3/8 in. shaft
AM-113	—	Slotted crank arm for 1/2 in. shaft.
AM-115	—	Slotted crank arm for 7/16 in. shaft.
AM-122	—	Straight connector.
AM-123	—	Damper clip.
AM-125	—	5/16 x 20 in. damper rod.
AM-125-048	—	5/16 x 48 in. damper rod.
AM-132	—	Ball joint connector.
N5-75	—	1/2 in. I.D. shaft coupling to extend damper drive shafts (includes four set screws).
N800-1403	—	Slotted crank arm for 3/8 in. shaft.
N800-1404	—	Slotted crank arm for 1/2 in. shaft.
N800-1414	—	3-hole crank arm for 3/8 in. shaft (for 2, 3, 4 in. strokes).
N800-1415	—	3-hole crank arm for 1/2 in. shaft (for 2, 3, 4 in. strokes).
M556 Kits		
—	2850-031	Add-on positioner kit, 3 psig span. Includes positioner and mounting hardware.
—	2850-053	Add-on positioner kit, 5 psig span. Includes positioner and mounting hardware.
—	2850-054	Add-on positioner kit, 10 psig span. Includes positioner and mounting hardware.
M573 Kits		
—	2850-017	Add-on positioner kit, 5 psig span feedback spring.
—	2850-018	Add-on positioner kit, 10 psig span feedback spring.
—	2850-028	Add-on positioner kit, 3 psig span feedback spring.
M574 Kits		
—	2850-019	Add-on positioner kit, 5 psig feedback spring.
—	2850-020	Add-on positioner kit, 10 psig span feedback spring.
Actuators (no linkage)		
N800-0203	—	2 in. stroke, 5 to 10 psig.
N800-0206	—	2 in. stroke, 10 to 15 psig.
N800-0208	—	2 in. stroke, 4 to 8 psig.
N800-0255	—	2 in. stroke,8 to 13 psig, bare swivel.
N800-0302	—	3 in. stroke, 3 to 12 psig.
N800-0303	—	3 in. stroke, 5 to 10 psig.
N800-0305	—	3 in. stroke, 8 to 13 psig.
N800-0308	—	3 in. stroke, 4 to 8 psig.
N800-0353	—	3 in. stroke, 5 to 10 psig.
N800-0403	—	4 in. stroke, 5 to 10 psig.
N800-0405	—	4 in. stroke, 8 to 13 psig.
N800-0455	—	4 in. stroke, 8 to 13 psig, bare swivel.
Diaphragms		
N800-9422	—	For M572 (2472) Series.
N800-9423	—	For M573 (2473) Series.
N800-9424	—	For M574 (2474) Series.
N800-9426	—	For M556 (2466) Series.
Replacement Springs for M572 Series		
N800-4202	—	3 to 12 psig
N800-4203	—	5 to 10 psig.
N800-4205	—	8 to 13 psig.
N800-4206	—	10 to 15 psig.
N800-4208	—	4 to 8 psig.
Replacement Springs for M573 Series		
N800-4302	—	3 to 12 psig.
N800-4303	—	5 to 10 psig.
N800-4305	—	8 to 13 psig.
N800-4306	—	10 to 15 psig.
N800-4308	—	4 to 8 psig.
Replacement Springs for M574 Series		
N800-4402	—	3 to 12 psig.
N800-4405	—	8 to 13 psig.
N800-4408	—	4 to 8 psig.

Pneumatic Valve Actuator

For proportional pneumatic control of 1/2 in. to 2 in. VB-7xxx Series valves (subject to close-off ratings) and discontinued 1/2 in. to 1-1/4 in. VB-9xxx valves.

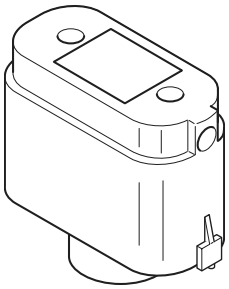

Features:

- Compact size with 6 in.^{2} (39 cm^2) effective area.
- Rugged die cast aluminum housing.
- Replaceable beaded molded neoprene diaphragm.

Model Chart

Model No.	Nominal Spring Range[a] (Spring Color Code)	
	psig	kPa
MK-2690	3 to 7 (Yellow)	21 to 48
	5 to 10 (Black)	34 to 69
	8 to 13 (Blue)	55 to 90

[a] Nominal (no load) condition, spring ranges based on 1/2 in. (13 mm) maximum stroke, provided by AV-7400 or AV-400 linkage (order separately).

Specifications

Inputs Compatible with	Proportional pneumatic signal. Refer to Model Chart.
Start point	Non-adjustable.
Air connections	1/8 in. FNPT located on side of housing.
Mechanical Outputs	
Stroke	1/2 in. (12.6 mm) nominal.
Environment	
Ambient temperature limits	Shipping: -40 to 220°F (-40 to 104°C). Operating: -20 to 220°F (-29 to 104°C).
Humidity	5 to 95% RH, non-condensing.
Maximum air pressure	30 psig (207 kPa).
Spring	Stainless steel spring retracts actuator shaft and raises valve stem on loss of air pressure. Springs provided in AV-400 or AV-7400 linkage (order separately).
Dimensions	3-9/16 H x 5 W x 2-1/4 D in. (90 x 127 x 57 mm).

Accessories

Model No.	Description
AK-42309-500	Positive positioner and linkage.
AV-400	Valve linkage (includes parts for VB-7xxx and discontinued 1/2 to1-1/4 in. VB-9xxx valves).
AV-7400	Valve linkage for VB-7xxx valves only.
TOOL-095-1	Pneumatic calibration tool kit.
Maintenance Parts	
PNV-144-43	3 to 7 psig spring.
PNV-145-44	5 to 10 psig spring.
PNV-145-43	8 to 13 psig spring.
PNV-102-1	Diaphragm.
PNV-104-2	Piston.

Pneumatic Damper Actuators

Proportional pneumatic actuator with 8 in.^{2} (52 cm^2) effective area used to control dampers, mixing boxes, air valves, etc., in heating, ventilating, and air conditioning systems.

Features:

- Rugged cast aluminum bodies.
- Long lasting rolling diaphragm.
- Provisions for adjustable stroke-stop.

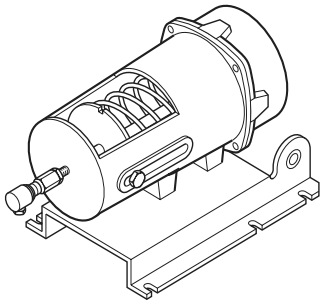

MK-31xx Series

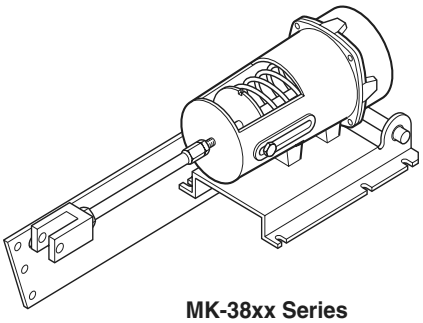

MK-38xx Series

Model Chart

Model No.	Nominal Operating Range		Starting Pressure		Nominal Stroke[a]	Maximum Force[b]				Nominal Torque[c] Proportional Control[b]		
						Return Stroke	Power Stroke					
						Based on 1.5 psi (10 kPa) Pressure to Actuator	15 psi (103 kPa) Supply Dual Press. System	15 psi (103 kPa) Supply Single Press. System[d]	20 psi (138 kPa) Supply Single or Dual Press. System[d]	15 psi (103 kPa) Supply Dual Press. System	15 psi (103 kPa) Supply Single Press. System[d]	20 psi (138 kPa) Supply Single or Dual Press. System[d]
	psig	kPa	psig	kPa	in. (mm)	lb (N)	lb (N)	lb (N)	lb (N)	lb-in. (N-m)	lb-in. (N-m)	lb-in. (N-m)
MK-3101	3 to 8	21 to 55	3 ±1	21 ±7	3-1/2 (89), adjustable 2 to 4 (51 to 102)	12 (53)	44 (196)	56 (249)	96 (427)	21 (2.37)	21 (2.37)	21 (2.37)
MK-3111	5 to 10	34 to 69	5 ±1	34 ±7		28 (125)	28 (125)	40 (178)	80 (356)			

[a] Factory setting required for published operating range.

[b] Force and torques based on factory set stroke and starting pressure.

[c] Nominal torque for actuators without positive positioner is based on 1.5 psi pressure change at the actuator.

[d] Adjust pressure reducing valve so that listed pressures are available at the actuator.

Model Chart (Continued)

Model No.	Nominal Operating Range		Starting Pressure		Nominal Stroke[a]	Maximum Force[b]				Nominal Torque[c] Proportional Control[b]		
						Return Stroke	Power Stroke					
						Based on 1.5 psi (10 kPa) Pressure to Actuator	15 psi (103 kPa) Supply Dual Press. System	15 psi (103 kPa) Supply Single Press. System[d]	20 psi (138 kPa) Supply Single or Dual Press. System[d]	15 psi (103 kPa) Supply Dual Press. System	15 psi (103 kPa) Supply Single Press. System[d]	20 psi (138 kPa) Supply Single or Dual Press. System[d]
	psig	kPa	psig	kPa	in. (mm)	lb (N)	lb (N)	lb (N)	lb (N)	lb-in. (N-m)	lb-in. (N-m)	lb-in. (N-m)
MK-3121	8 to 13	55 to 90	8 ±1	55 ±7	3-1/2 (89), adjustable 2 to 4 (51 to 102)	52 (231)	4 (18)	16 (71)	56 (249)	7 (0.79)	21 (2.37)	21 (2.37)
MK4-3121[e]											28 (3.16)	91 (10.28)
MK-3141	3 to 13	21 to 90	3 non-adj.	21 non-adj.		12 (53)					21 (2.37)	21 (2.37)
MK-3151	3 to 6, 9 to 12	21 to 41, 62 to 83	3 to 6	21 to 41	2-3/4 (70), adjustable 2 to 2-3/4 (51 to 70)		12 (53)	24 (107)	64 (285)	21 (2.37)		
MK-3161	3 to 6, 11 to 17	21 to 41, 76 to 117					0 (0)	0 (0)	24 (107)	0 (0)	0 (0)	
MK-3821	8 to 13	55 to 90	8 ±1	55 ±1	3-1/2 (89), adjustable 2 to 4 (51 to 102)	52 (231)	4 (18)	16 (71)	56 (249)	7 (0.79)	21 (2.37)	
MK4-3821[e]	8 to 13										28 (3.16)	91 (10.28)

[a] Factory setting required for published operating range.

[b] Force and torques based on factory set stroke and starting pressure.

[c] Nominal torque for actuators without positive positioner is based on 1.5 psi pressure change at the actuator.

[d] Adjust pressure reducing valve so that listed pressures are available at the actuator.

[e] Factory installed positive positioner (AK-42309-500) start point adjustable 2 to 10 psi with span adjustable 2 to 10 psi.

Specifications

Construction	
Housing	Die cast aluminum.
Diaphragm	Beaded molded neoprene.
Stroke	Refer to Model Chart.
Nominal Damper Area	Actuator sizing should be done in accordance with damper manufacturer's specifications.
Start point	Adjustable on most models ±1 psi, refer to Model Chart.
Spring	Retracts actuator shaft on loss of air pressure.
Maximum air pressure	30 psig (207 kPa).
Ambient temperature limits	
Shipping	-40 to 160°F (-40 to 71°C).
Operating	-20 to 160°F (-29 to 71°C).
Air connections	1/8 in. FNPT.
Mounting	In any position. Mounting bracket (except MK-3300 Series end mounting) and connector for 5/16 in. (8 mm) diameter push rod included with actuator.
Dimensions	
MK-3100, MK4-3100 Series	12 L x 5-7/8 W x 5-1/2 D in. (305 x 149 x 140 mm).
MK-3800 Series	20-3/16 L x 7-1/4 W x 6-1/2 D in. (513 x 184 x 165 mm).

Accessories

Model No.	Description
AK-42309-500	Positive positioner and linkage.
AM-111	Crank arm for 5/16 in. diameter damper shaft.
AM-112	Crank arm for 3/8 in. diameter damper shaft.
AM-113	Crank arm for 1/2 in. diameter damper shaft.
AM-115	Crank arm for 7/16 in. diameter damper shaft.
AM-122	Linkage connector straight type.
AM-123	Damper clip.
AM-125	5/16 x 20 in. damper rod.
AM-125-048	5/16 x 48 in. damper rod.
AM-132	Ball joint connector.
AM-161-3	Damper linkage kit AM-113 crank arm and AM-132 connector).
AM-301	90° mounting bracket for pivot mounting.
AM-530	Crank arm for 1/2 in. diameter damper shaft holes for 3-1/2 in. and 4-1/2 in. stroke.
AM-532	Bolt-on frame lug and damper blade clip kit.
AM-533	Actuator shaft extension.
AM-534	Pivot stud for pivot mounting.
AM-535	Clevis for pivot mounting.
AM-536	Mounting plates for pivot mounting on ducts or damper frame.
AM-545	Rod end connector for 5/16 in. (10 mm) dia. rods.
TOOL-095-1	Pneumatic calibration tool kit.
Maintenance Parts	
PND-45-343	3 to 8 green spring.
PND-45-345	5 to 10 black spring.
PND-45-348	8 to 13 blue spring.
PND-002-1	Diaphragm.
PND-91	High temperature diaphragm.

Damper Actuators, Proportional

For proportional pneumatic actuator with 11 sq. in. (71 cm^2) effective area used to control damper and air valves in heating, ventilating, and air conditioning systems.

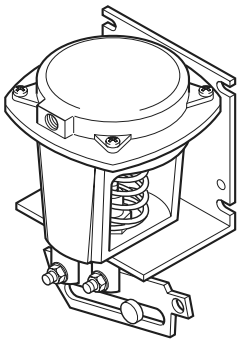

Features:

- Rugged cast aluminum body.
- Special linkage permits easy adjustment of stroke to suit various applications.
- Hesitation and non-hesitation models available.

Model Chart

Model No.	Nominal Operating Range	Starting Pressure Adjustable	Maximum Force[a]				Nominal Torque[b] Proportional Control [a]		
			Return Stroke	Power Stroke					
			Based on 1.5 psi Pressure to Actuator	15 psi Supply Dual Press. System	15 psi Supply Single Press. System[c]	20 psi Supply Single or Dual Press. System [c]	15 psi Supply Dual Press. System	15 psi Supply Single Press. System [c]	20 psi Supply Single or Dual Press. System [c]
	psig	psig	lb	lb	lb	lb	lb-in.	lb-in.	lb-in.
MK-4401 MK4-4401[d]	3 to 8	3 ±1	8.25	30.25	38.5	66	7.9	7.9	7.9
MK-4411 MK4-4411 [d]	5 to 10	5 ±1	19.25	19.25	27.5	55	7.9	7.9	7.9
MK-4421 MK4-4421 [d]	8 to 13	8 ±1	35.75	2.75	11	38.5	2.6	7.9	7.9
MK-4451 MK4-4451 [d]	3 to 6, 9 to 12	3 to 6	8.25	8.25	16.5	44	7.9	7.9	7.9
MK-4461 MK4-4461 [d]	3 to 6, 11 to 17			0	0	16.5	0	0	

[a] Force and torques on based on factory set stroke and starting pressure.

[b] Nominal torque for actuators is based on 1.5 psi (10 kPa) pressure change at the actuator.

[c] Adjust pressure reducing valve so that listed pressures are available at the actuator. MK-4421 requires that 15 psi (103 kPa) be available to actuator. MK-4461 requires that 20 psi (138 kPa) be available to actuator.

[d] Factory installed positive positioner (AK-42309-500) start point adjustable 2 to 10 psi with span adjustable 2 to 10 psi.

Specifications

Construction	
Housing	Die cast aluminum.
Diaphragm	Replaceable beaded molded neoprene (Part number PNV-2).
Stroke	
Linkage	Adjustable 1/2 to 3 in. (13 to 76 mm); factory set for 2 in. (51 mm).
Diaphragm	Factory set for 1 in. (25 mm).
Nominal Damper Area	Actuator sizing should be done in accordance with damper manufacturer's specifications.
Start point	Adjustable. Refer to Description Model Chart.
Spring	Retracts actuator crank arm on loss of air pressure.
Maximum air pressure	30 psig (207 kPa).
Ambient temperature limits	
Shipping	-40 to 160°F (-40 to 71°C).
Operating	-20 to 160°F (-29 to 71°C).
Air connections	1/8 in. FNPT.
Mounting	In any position. Mounting bracket, linkage, and connector for 5/16 in. (8 mm) diameter push rod assembled to actuator.
Dimensions	7-7/16 H x 5-3/4 W x 4-7/8 D in. (189 x 146 x 124 mm).

Accessories

Model No.	**Description**
AK-42309-500	Positive positioning relay.
AM-111	Crank arm for 5/16 in. diameter damper shaft.
AM-112	Crank arm for 3/8 in. diameter damper shaft.
AM-113	Crank arm for 1/2 in. diameter damper shaft.
AM-115	Crank arm for 7/16 in. diameter damper shaft.
AM-122	Linkage connector straight type.
AM-123	Damper clip.
AM-125	5/16 x 20 in. damper rod.
AM-125-048	5/16 x 48 in. damper rod.
AM-132	Ball joint connector.
AM-161-3	Damper linkage kit (AM-173 crank arm and AM-132 connector).
AM-743	Linkage kit for M-693 Series replacement.
TOOL-095-1	Pneumatic calibration tool kit.
Maintenance Parts	
PND-145-104	3 to 8 psig spring.
PND-145-104	5 to 10 psig spring.
PND-145-107	8 to 12 psig spring.
PNV-002	Diaphragm.

Valve Actuators, Proportional

For proportional pneumatic actuator with 11 sq. in. (71 cm^2) effective diaphragm area used to control 1/2 in. to 2 in. VB-7xxx series valves and SP-3xx00 step controllers.

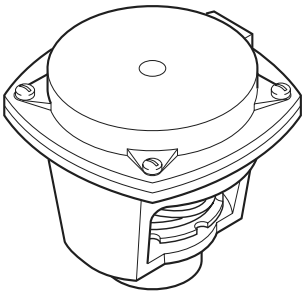

Features:

- Rugged die cast aluminum construction.
- Rolling diaphragm.
- Multiple spring ranges for various applications.
- Adjustable start point (refer to Specifications).
- 1/2 in. nominal stroke.
- Can also be used on 1/2" stroke discontinued VB-9xxx series valves (1/2” to 1-1/4”).

Model Chart

Model No.	Nominal Spring Range[a]	
	psig	kPa
MK-4601, MK4-4601	3 to 6	21 to 41
MK-4611, MK4-4611	5 to 10	34 to 69
MK-4621, MK4-4621	10 to 13	69 to 90
MK-4621-422	10 to 11.25	69 to 77
MK-4641	3 to 13	21 to 90

[a] Nominal (no load) spring ranges based on 1/2 in. (13 mm) maximum stroke.

Specifications

Construction	
Housing	Die cast aluminum.
Diaphragm	Replaceable beaded molded neoprene (Part number PNV-2).
Stroke	1/2 in. (25.4 mm) nominal.
Spring	Retracts actuator shaft and raises valve stem on loss of air pressure.
Nominal spring range	Refer to Model Chart.
Starting point	Field adjustable.
MK-4601, MK-4621 (-422)	+1/2 psig (7 to 14 kPa).
MK-4611, MK-4641	±2 psig (14 kPa).
Maximum air pressure	30 psig (207 kPa).
Ambient temperature limits	
Shipping	-40 to 220°F (-40 to 104°C).
Operating	-20 to 220°F (-29 to 104°C).
Air connections	1/8 in. FNPT.
Valve linkage	Order separately AV-401.
Mounting	In any upright position with actuator head above the center line of the valve body.
Dimensions	3-7/8 H x 4-3/4 W x 4-3/4 D in. (99 x 121 x 121 mm).

Accessories

Model No.	Description
AK-42309-500	Positive positioner and linkage; use with MK-46X1.
TOOL-095-1	Pneumatic calibration tool kit.
Maintenance Parts	
PNV-002	Diaphragm.
PNV-004-2	Piston.
PNV-232	10 to 11.25 psig spring for MK-4621-422.
PNV-238	3 to 6 psig spring for MK-4601.
PNV-239	10 to 13 psig spring for MK-4621.
PNV-251	High temperature diaphragm.

Valve Actuators, Proportional

Proportional pneumatic actuator with 50 sq. in. (323 cm^2) effective diaphragm area used to control 1-1/2 in. to 2 in. VB-7xxx series, 2-1/2 in. to 5 in. VB-8xxx series, 2-1/2 in. to 4 in. discontinued VB-9xxx series and 4 in. to 6 in. discontinued VB-9323 series valves.

Features:

- Rugged die cast aluminum construction.
- Rolling diaphragm.
- Three spring ranges for various applications.
- Start point adjustable ±2 psi.

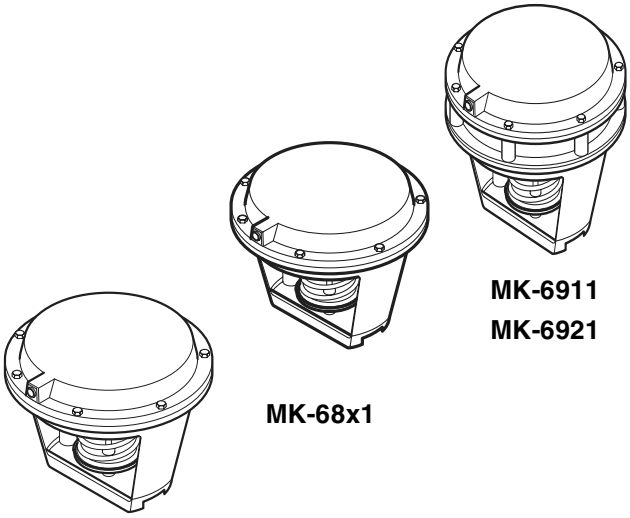

MK-6911
MK-6921

MK-68x1

MK-66x1

Model Chart

Model No.	Nominal Spring Range[a]		Nominal Stroke in. (mm)
	psig	kPa	
MK-6601	3 to 8	21 to 55	1/2 (13.7)
MK-6611	5 to 10	34 to 69	1/2 (13.7)
MK-6621	8 to 13	55 to 90	1/2 (13.7)
MK-6801	3 to 8	21 to 55	1 (25.4)
MK-6811	5 to 10	34 to 69	
MK-6821	8 to 13	55 to 90	
MK-6911[bc]	5 to 10	34 to 69	1-1/2 (33.1)
MK-6921[b]	8 to 13	55 to 90	1-1/2 (33.1)

[a] Nominal (no load) spring ranges based on maximum 1/2 in. (13.7 mm), 1 in. (25.4 mm) or 1-1/2 in. (33.1 mm) stroke for MK-6911.
[b] MK-6911 is only used on 6 in. VB-8xx3-0-5-16. MK-6911 and MK-6921 were used on discontinued 4 to 6 in. VB-9323-0-5-x.
[c] Recommended for field replacements only where 20 psi air supply pressure is not available and/or required close-off pressure is less than 125 psi.

Specifications

Construction	
Housing	Die cast aluminum.
Diaphragm	Replaceable beaded molded neoprene (Part number PNV-202).
Stroke	Refer to Model Chart.
Spring	Retracts actuator shaft and raises valve stem on loss of air pressure.
Nominal spring range	Refer to Model Chart.
Starting point	Adjustable ±2 psig (14 kPa).
Maximum air pressure	30 psig (207 kPa).
Ambient temperature limits	
Shipping	-40 to 220°F (-40 to 104°C).
Operating	-20 to 220°F (-29 to 104°C).
Air connections	1/8 in. FNPT.
Valve linkage	Refer to Accessories (order separately).
Mounting	In any upright position with actuator head above the center line of the valve body.
Dimensions	7-3/4 H x 10-1/2 W x 10-1/2 D in. (199 x 267 x 267 mm).

Accessories

Model No.	Description
AK-42309-500	Positive positioner and linkage.
TOOL-075	Spring compression tool.
TOOL-095-1	Pneumatic calibration tool kit.
Linkage	**Valve Body Series**
AV-430	VB-7xx3, 1-1/2 to 2 in.
	VB-7xx4, 1-1/2 to 2 in.
	VB-9323, 2-1/2 to 6 in. (discontinued).
AV-495	VB-9213, 2-1/2 to 4 in.(discontinued).
	VB-9223, 2-1/2 to 4 in.(discontinued).
	VB-9313, 2-1/2 to 4 in.
AV-497	VB-8213, 2-1/2 to 6 in.
	VB-8223, 2-1/2 to 6 in.
	VB-8303, 2-1/2 to 6 in.
Maintenance Parts	
MK-68xx Series (1 in. stroke)	
PNV-245-103	3 to 8 psig spring.
PNV-245-105	5 to 10 psig spring.
PNV-245-108	8 to 13 psig spring.
MK-66xx Series (1/2 in. stroke)	
PNV-245-013	3 to 8 psig spring.
PNV-245-015	5 to 10 psig spring.
PNV-245-018	8 to 13 psig spring.
MK-69xx Series (1-1/2 in. stroke)	
PNV-245-148	8 to 13 psig spring.
PNV-245-145	5 to 10 psig spring.
All Series	
PNV-202	Diaphragm.

Damper Actuators, Proportional

For proportional pneumatic actuator with 20 sq. in. (129 cm^2) effective area used to control damper and air valves in heating, ventilating, and air conditioning systems.

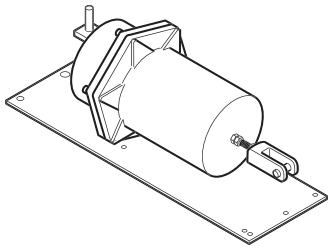

Features:

- Rugged cast aluminum body.
- Completely enclosed spring.
- Long lasting rolling diaphragms.

Model Chart

Model No.	Nominal Operating Range	Starting Pressure Adjustable	Maximum Force[a]				Nominal Torque[b] Proportional Control [a]		
			Return Stroke	Power Stroke					
			Based on 1.5 psi Pressure to Actuator	15 psi Supply Dual Press. System	15 psi Supply Single Press. System[c]	20 psi Supply Single or Dual Press. System [c]	15 psi Supply Dual Press. System	15 psi Supply Single Press. System [c]	20 psi Supply Single or Dual Press. System [c]
	psig	psig	lb	lb	lb	lb	lb-in.	lb-in.	lb-in.
MK-7101 MK4-7101	3 to 8	3 ±5	30	110	140	240	67.5	67.5	67.5
MK-7121	8 to 13	8 ±0.5	130	10	40	140	22.5		
MK4-7121[d]								90	293

[a] Force and torques based on factory set stroke and starting pressure.

[b] Nominal torque for actuators without positioner is based on 1.5 psi (10 kPa) pressure change at the actuator. MK-7121 requires 15 psi (103 kPa) be available to actuator.

[c] Adjust pressure reducing valve so that listed pressures are available at the actuator. MK4-7121 requires 20 psi (138 kPa) be available to actuator.

[d] Factory installed positive positioner (AK-42309-500) start point adjustable 1 to 12 psi (7 to 83 kPa) with span adjustable 2 to 13 psi (14 to 90 kPa).

Specifications

Construction	
Housing	Die cast aluminum.
Diaphragm	Replaceable beaded molded neoprene.
Stroke	Nominal 4-1/2 in. (114 mm), adjustable 4 to 5 in. (102 to 127 mm).
Nominal Damper Area	Actuator sizing should be done in accordance with damper manufacturer's specifications.
Start point	Adjustable, refer to Description Model Chart.
Spring	Retracts actuator crank arm on loss of air pressure.
Maximum air pressure	30 psig (207 kPa).
Ambient temperature limits	
Shipping	-40 to 160°F (-40 to 71°C).
Operating	-20 to 160°F (-29 to 71°C).
Air connections	1/8 in. FNPT.
Mounting	In any position.
Dimensions	17-5/8 H x 7-3/4 W x 7-5/8 D in. (448 x 197 x 194 mm).

Accessories

Model No.	Description
AK-42309-500	Positive positioner and linkage.
AM-301	90 degree mounting bracket for floor mounting.
AM-530[a]	Crank arm for 1/2 in. diameter damper shaft. Holes for 4-1/2 in. stroke.
AM-532	Bolt-on frame lug and damper blade clip kit.
AM-538	Actuator brace kit.
AM-542	Rod end connector for 5/16 in. (10 mm) rod.[b]
AM-543	Actuator shaft extension.
TOOL-095-1	Pneumatic calibration tool kit.
Maintenance Parts	
PND-90	High temperature diaphragm.
PND-202	Diaphragm.
PND-203	Lower housing.
PND-245-103	3 to 8 psig spring.
PND-245-108	8 to 13 psig spring.

[a] Required to connect damper actuator to damper.

[b] NOTE: Maximum length of 5/16 in. (8 mm) rod which can be used with AM-542, 15 in. (381 mm).

Floor Mounted Damper Actuators

For proportional pneumatic actuator used to control inlet vanes on small and medium size fans or large jackshafted dampers.

Features:

- Dual actuators, operating a single shaft and piloted by a position, provide maximum capacity for heavy loads.
- Lever with multiple holes facilitates stroke adjustment to suit various applications.
- Rigid steel base provides firm actuator support.

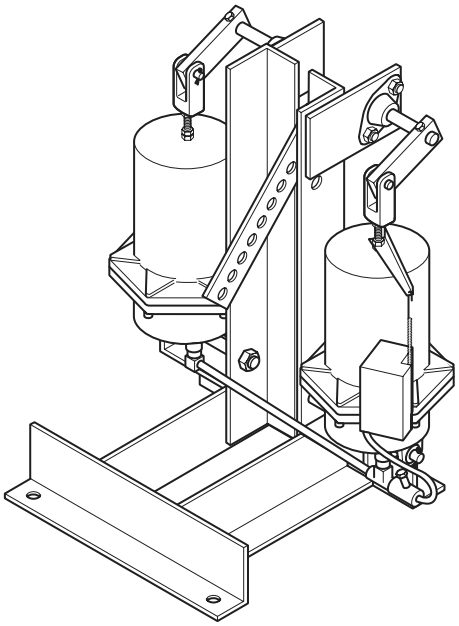

MK-7921

Model Chart

Model No.	Diaph. Area (Total) in.^{2} (cm^2)	Stroke in. (mm)										Max. Torque[b] Power Stroke lb-in. (N-m)	Return Stroke lb-in. (N-m)	Nominal Torque for Proportional Control[a] lb-in. (N-m)
		4 (102)	5 (127)	6 (152)	7 (178)	8 (203)	9 (229)	10 (254)	11 (279)	12 (305)	13 (330)			
		Lb (N) Force Available for Various Strokes[b]												
MK-7821 Single	20 (129)	135 (600)	108 (480)	90 (400)	77 (343)	68 (302)	60 (267)	54 (240)	49 (218)	45 (200)	42 (187)	315 (35.5)	360 (40.6)	67.5 (7.6)
MK-7921 Dual	40 (258)	270 (1201)	216 (961)	180 (801)	154 (685)	136 (605)	120 (534)	109 (465)	98 (436)	90 (400)	84 (374)	630 (71.0)	720 (81.2)	135 (15.2)

[a] Based on a 1.5 psig (10kPa) pressure change at the actuator.

[b] With 20 psig (138 kPa) main supply.

Specifications

Construction	
Housing	Die cast aluminum.
Diaphragm	Replaceable beaded molded neoprene.
Assembly	Actuator(s) and positive positioner (AK-42309-500) are factory mounted on a frame of channel and angle iron.
Rotary output	Provided by a driving lever arm connected to a bearing supported jackshaft.
Stroke	Rotary output of 60° driving lever arm connecting point adjustable from 4 to 13 in. (102 to 330 mm), in 1 in. (25.4 mm) increments, from centerline of jackshaft.
Nominal Damper Area	Actuator sizing should be done in accordance with damper manufacturer's specifications.
Connecting linkage	AM-394 adjustable 15-3/4 to 24-3/4 in. (400 to 629 mm) is included to link actuator to damper.
Spring	Retracts actuator shaft on loss of air pressure.
Maximum air pressure	30 psig (207 kPa).
Ambient temperature limits	
Shipping	-40 to 160°F (-40 to 71°C).
Operating	-20 to 160°F (-29 to 71°C).
Air connections	Barbed fitting for 1/4 in. plastic tubing.
Mounting	Floor.
Dimensions	30-1/2 H x 16 W x 20 D in. (775 x 406 x 508 mm).

Accessories

Model No.	**Description**
AM-535	Clevis with 3/8 in. FNPT.
Maintenance Parts	
PND-90	High temperature diaphragm.
PND-202	Diaphragm.
PND-245-103	2 to 8 psig spring.
PND-245-108	8 to 13 psig spring.

Valve Actuators, Proportional

Proportional pneumatic actuator with 100 in.^{2} (645 cm^2) effective area. MK-88xx Series used to control 2-1/2 in. through 4 in. valves requiring 1 in. stroke. MK-89xx Series used to control 5 in. and 6 in. valves requiring 2 in. nominal stroke. Used with VB-931x and discontinued VB-921x, VB-922x valves.

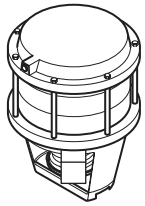

MK-88xx Series

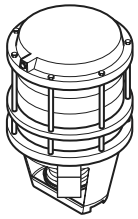

MK-89xx Series

Features:

- Heavy duty aluminum construction.
- Large diaphragm area provides the required force to modulate large valves.
- Valve stroke indicated in 1/8 in. increments.

Model Chart

Model No.	Nominal Spring Range[a]		Nominal Stroke		For Use with Valve Bodies
	psig	kPa	in.	mm	
MK-8801	3 to 8	21 to 55	1	25.4	2-1/2 to 4 in. VB-9213 VB-9223 VB-9313
MK-8811	5 to 10	34 to 69			
MK-8821	8 to 13	55 to 90			
MK-8901	3 to 8	21 to 55	2	50.8	5 in. and 6 in. VB-9213 VB-9223 VB-9313
MK-8911	5 to 10	34 to 69			
MK-8921	8 to 13	55 to 90			

[a] Nominal (no load) spring ranges are based on maximum 1 in. (25.4 mm) or 2 in. (50.8 mm) stroke.

Specifications

Construction	
Housing	Die cast aluminum.
Diaphragm	Replaceable beaded molded neoprene.
Stroke	Refer to Model Chart.
Spring	Retracts actuator shaft and raises valve stem on loss of air pressure.
Nominal spring range	Refer to Model Chart.
Starting point	Adjustable ±1 psi (7 kPa).
Maximum air pressure	30 psig (207 kPa).
Ambient temperature limits	
Shipping	-40 to 220°F (-40 to 104°C).
Operating	-20 to 220°F (-29 to 104°C).
Air connection	1/8 in. FNPT.
Valve linkage	Order separately AV-496-0-0-1.
Valve stroke position indication	1/8 in. (3 mm) increments.
Mounting	In any upright position with actuator head above 45° of the center line of the valve body.
Dimensions	
MK-88xx Series	11-3/4 H x 10-1/2 W x 10-1/2 D in. (298 x 267 x 267 mm).
MK-89xx Series	12-3/4 H x 10-1/2 W x 10-1/2 D in. (342 x 267 x 267 mm).

Accessories

Model No.	Description
AK-42309-500	Positive positioner with linkage.
TOOL-095-1	Pneumatic calibration tool kit.
Maintenance Parts	
PNV-202	Diaphragm (2 required).
PNV-312	Rolling diaphragm.

Damper Actuators, Proportional

For proportional pneumatic actuator with 3 in.^{2} (19 cm^2) effective area used to control small dampers and mixing boxes.

Features:
- All-plastic construction.
- Meets UL-465 requirements for air plenum mounting.
- Ideal for VAV terminal unit control.

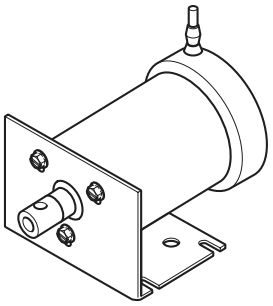

Model Chart

Model No.	Nominal Operating Range	Stroke	Starting Pressure Non-Adjustable	Maximum Force[a]				Nominal Torque[b] Proportional Control [a]		
				Return Stroke	Power Stroke					
				Based on 1.5 psi Pressure to Actuator	15 psi Supply Dual Press. System	15 psi Supply Single Press. System[c]	20 psi Supply Single or Dual Press. System [c]	15 psi Supply Dual Press. System	15 psi Supply Single Press. System [c]	20 psi Supply Single or Dual Press. System [c]
	psi	in.	psi	lb	lb	lb	lb	lb-in.	lb-in.	lb-in.
MK-12100	3 to 8	2	3	4.5	16.5	21	36	4.5	4.5	4.5
MK-12110	5 to 10		5	10.5	10.5	15	30			
MK-12120	8 to 13		8	19.5	1.5	6	21	1.5		
MK-12140	3 to 13		3	4.5						

[a] Force and torques based on factory set stroke, starting pressure, and 90° rotation of driven damper shaft.

[b] Nominal torque for actuators is based on 1.5 psi (10 kPa) pressure change at the actuator.

[c] Adjust pressure reducing valve so that listed pressures are available at the actuator.

Specifications

Construction	
Housing	Rynite®, Zytel®, and Ultem® UL-94-5V flame rated plastic material to meet UL-465 requirements for air plenum mounting.
Diaphragm	Beaded molded neoprene.
Stroke	2 in. (50.8 mm).
Nominal Damper Area	Actuator sizing should be done in accordance with damper manufacturer's specifications.
Spring	Retracts actuator shaft on loss of air pressure.
Maximum air pressure	30 psig (207 kPa).
Ambient temperature limits	
Shipping	-40 to 180°F (-40 to 82°C).
Operating	-20 to 150°F (-29 to 66°C).
Air connections	Barbed for 1/4 in. and 5/32 in. O.D. plastic tube [for runs up to 20 ft. (6 m)].
Mounting	In any position. Mounting bracket and ball joint connector for 5/16 in. diameter push rod assembled to actuator.
Dimensions	5-5/8 H x 3-9/16 W x 3-5/16 D in. (143 x 90 x 84 mm).

Accessories

Model No.	Description
AM-111	Crank arm for 5/16 in. diameter damper shaft.
AM-112	Crank arm for 3/8 in. diameter damper shaft.
AM-113	Crank arm for 1/2 in. diameter damper shaft.
AM-115	Crank arm for 7/16 in. diameter damper shaft.
AM-122	Linkage connector straight type.
AM-123	Damper clip.
AM-125	5/16 x 20 in. damper rod.
AM-125-048	5/16 x 48 in. damper rod.
AM-132	Ball joint connector.
AM-161-3	Damper linkage kit (AM-113 crank arm and AM-132 connector).
TOOL-095-1	Pneumatic calibration tool kit.

Pneumatic Limit Controls

These controls open an integral pneumatic switch when sensed temperature reaches the control setpoint.

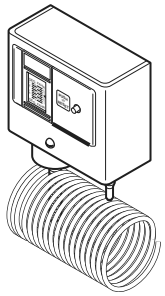

Features:

- Reduces installation cost when temperature sensing point is located a considerable distance from the motor starter of an air-handling unit supply fan.
- N100-2509 and N100-2513 respond when any one foot of the 20 foot sensing element drops below setpoint.
- If used with DPDT P/E Switch, one circuit of P/E can (for example) open to de-energize a fan motor starter, while the other circuit closes to initiate an alarm.

Model Chart

Model No.	Description
N100-2509[a]	15 to 55°F (-9 to 13°C). Pneumatic low limit, manual reset. Differential 5F degrees (2.7C degrees).
N100-2513 [a]	Same as N100-2509, but automatic reset. Differential 5F degrees (2.78C degrees).

[a] All devices require N100-0010, N4-32, or N100-2501 restrictor.

Specifications

Dimensions	3-63/64 H x 4-3/8 W x 2-9/32 D in. (101 x 112 x 58 mm). **Note:** dimensions do not include coil.
Restrictor	Requires one N100-0010, N-32, or N100-2501.

Typical Applications

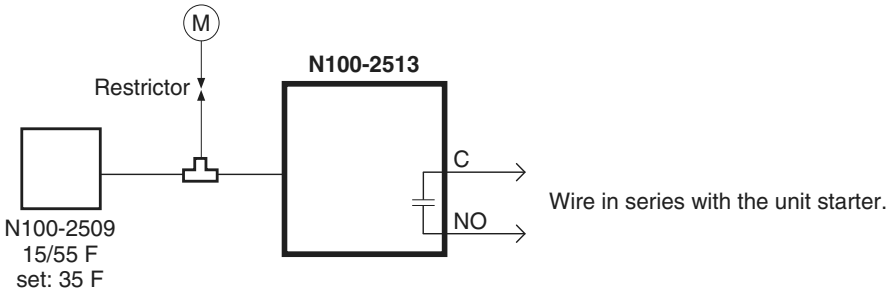

Figure 1 Typical Application.

Accessories

Model No.	Description
N4-32	Restrictor, 1/4 in. O.D. compression.
N100-0010	Restrictor tee for plastic tubing.
N100-2501	Restrictor, inline.

Pneumatic Liquid Flow Switch

The control port opens on no flow and closes on liquid flow.

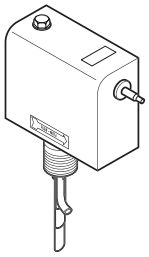

Features:

- Used with P/E Switch, reduces installation cost when flow sensing location is located a considerable distance from the desired electrical switching point.
- If used with a DPDT P/E Switch, one circuit can be used to stop (or start) a motor, while the other circuit closes to initiate an alarm.
- Paddles for 1 in., 2 in., and 3 in. pipe included.

Model Chart

Model No.	Description
N100-2511	Pneumatic liquid flow switch.

Specifications

Case	0.062 in. cold rolled steel finish.
Cover	0.028 in. cold rolled steel.
Finish	Gray baked enamel.
Maximum liquid pressure	150 psig (1034 kPa).
Maximum liquid temperature	250°F (121°C).
Minimum liquid temperature	32°F (0°C).
Flow	Signal passes.
No flow	Signal exhausts.
Restrictor	Requires one N100-0010, N4-32, or N100-2501.
Dimensions	4-17/32 W x 4-25/32 H x 2-13/16 D (115 x 121 x 71 mm).

Typical Flow Rates — GPM Required to Actuate Switch.

Line Pipe Size		1 in.	1-1/4 in.	1-1/2 in.	2 in.	2-1/2 in.	3 in.	4 in.[a]	5 in.[a]	6 in.[a]	8 in.[a]
Min. adj.	Closes on flow incr.	4.2	5.6	7.5	13.7	17.5	27.5	65.0 37.0[b]	125.0 57.0[b]	190.0 74.0[b]	375.0 205.0[b]
	Opens on flow decr.	2.5	3.5	5.0	9.5	12.0	19.0	50.0 27.0[b]	101.0 41.0[b]	158.0 54.0[b]	320.0 170.0[b]
Max. adj.	Closes on flow incr.	9.3	13.3	17.7	27.0	31.0	90.0	120.0 81.0[b]	245.0 118.0[b]	375.0 164.0[b]	760.0 415.0[b]
	Opens on flow decr.	9.0	12.5	16.5	25.0	28.5	47.0	122.0 76.0[b]	235.0 111.0[b]	360.0 135.0[b]	730.0 400.0[b]

[a] Flow rates for these sizes are calculated.

[b] These GPM figures are for switch with 6 in. paddle. For 4 in. and 5 in. line pipe, the paddle is trimmed.

Typical Applications

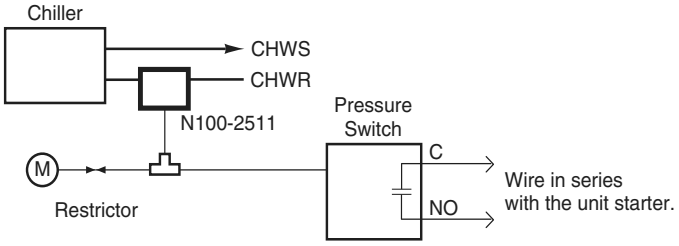

Figure 1 Typical Application.

Low Differential Pneumatic-Electric Switch

The pneumatic-electric switch features a SPDT narrow differential switch which makes it suitable for use with wide span pneumatic transmitters in such applications as alarm initiation and outdoor changeover of heating and cooling functions.

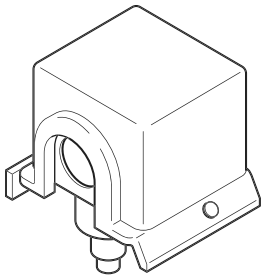

Features:

- Narrow-differential P.E. switch can be used with any type of pneumatic transmitter to initiate an alarm caused by either a high or low alarm condition.
- May be wall-mounted or panel-mounted where necessary to keep wiring runs short.

Model Chart

Model No.	Wholesale Model No.	Description
N100-4017	2364-202	Low differential pneumatic-electric switch.

Specifications

Setpoint	Adjustable fro 3 to 30 psig (21 to 207 kPa).
Switch action	SPDT.
Switch rating	5A at 125 to 250 Vac.
Differential	Non-adjustable, 0.25 psig (1.7 kPa) (lowest setpoint) to 0.7 psig (3.4 kPa) (highest setpoint).
Air signal pressure	Clean, dry, oil free air required (refer. EN-123).
Maximum overpressure	200 psig (1380 kPa) above setpoint.
Connections	
Air	1/8 in. MPT.
Electrical	Coded screw terminals.
Environment	
Locations	NEMA 1.
Case	1/2 in. conduit connection.
Mounting	Wall or panel.
Dimensions	4-3/8 x 3-1/2 x 2-13/16 in. (111 x 39 x 71 mm).

Typical Applications

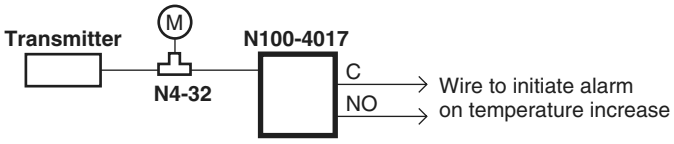

Figure 1 Typical Application.

Positive Positioning Relay

The N800-0555 is used with M556 (6 in. stroke), M573 (3 in. stroke), and M574 (4 in. stroke) damper actuators.

The N800-0555 is pilot-operated, providing excellent response to small signal pressure changes from the controller.

Pilot-operation also provides maximum resistance to actuator shaft displacement caused by outside force changes.

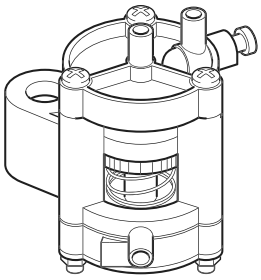

Features:

A built-in adjustable needle-valve permits setting the desired rate of actuator movement, helpful in two ways:

- Various size actuators operated by the same control signal can be made to operate at approximately the same rate of movement, since the smaller actuators can be slowed to match the rate of movements of larger actuators. One example: Outdoor, return and relief dampers of Air-Handling-Units, where the return damper is frequently smaller, and has a smaller actuator.
- Some rapidly changing processes are easier to control if the actuator moves slowly. Examples:
  - Duct static-pressure control.
  - Duct air-velocity control.
  - Control of the mixed-air-temperature of air-handling units, where the mixed-air-temperature changes instantly as the dampers change position. Since no sensor responds instantly, more stable control can be attained if the dampers move slowly. This, in turn, may allow use of a narrower controller throttling range.

Actuators may be ordered with positioners mounted. For field-mounting, feedback arm and spring must be ordered separately. Refer to Model Chart.

Model Chart

Model No.	Description
N800-0555-BOX	Positioner only.
N800-0555-P	Positioner kit. Includes one positioner, one feedback arm, and 5 and 10 psi feedback springs for M556 (6 in. stroke), M573 (3 in. stroke), and M574 (4 in. stroke).

Model Chart (Continued)

Feedback Springs.

Positioner Feedback Spring Selection			
Actuator Stroke	**Part No.**	**For Span of:**	**Model No.**
3 in.	M573 Series	3 psi	N800-2277
		5 psi	N800-2257
		10 psi	N800-2267
4 in.	M574 Series	3 psi	N800-2278
		5 psi	N800-2258
		10 psi	N800-2268
6 in.	M556 Series	3 psi	N800-2279
		5 psi	N800-2259
		10 psi	N800-2269

Positioner Kits.[a]

Wholesale Kit No.	For Span of:	Actuator Stroke	Actuator	
			Model No.	**Wholesale Model No.**
2850-028	3 psi	3 in.	M573 Series	2473 Series
2850-017	5 psi			
2850-018	10 psi			
2850-019	5 psi	4 in.	M574 Series	2474 Series
2850-020	10 psi			
2850-031	3 psi	6 in.	M556 Series	2466 Series
2850-053	5 psi			
2850-054	10 psi			

[a] Includes one positioner, one feedback arm, and one feedback spring.

Specifications

Environment	
Ambient Temperature Limits	-20 to 140°F (-29 to 60°C).
Supply Air Pressure	Clean, dry, oil-free air required (reference EN-123).
Nominal	20 psig (136 kPa).
Maximum	30 psig (207 kPa).
Air Consumption	30 scim (8 mL/s).

Pressure Transmitters

The pneumatic pressure transmitters are designed to measure either air or fluid pressures. All models transmit a fixed-span, 3 to 15 psig output signal proportional to input pressure to controlling and indicating devices such as receiver-controllers, receiver gauges, and certain pneumatic relays and alarm devices. These transmitters are available in various pressure ranges to meet most control system application requirements.

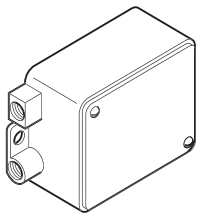

Features:

- Single-input pressure transmitter permits remote readout on receiver gauge, and control of air, water, steam or refrigerant pressure from a convenient location.
- Three different ranges permit proper match of transmitter range to application.
- Quality design and construction assure linearity and responsiveness.
- Factory-adjusted span and “zero”.
- Field-assemble “zero” adjustment.

Model Chart

Model No.	Wholesale Model No.	Input Pressure Range (psig)	Maximum Safe Pressure (psig)
P301-040	2301-040[a]	-10 to +40	65
P301-150	2301-150[a]	0 to 150	185
P301-300	2301-300[a]	0 to 300	350

[a] Includes one each 2”, 2-1/2” and 3-1/2” gauge overlay in the appropriate range.

Specifications

Output	3 to 15 psig.
Control Action	Direct, proportional.
Maximum ambient temperature	140°F (60°C).
Supply air pressure	Clean, dry, oil free air required (refer. EN-123).
Nominal	20 psig ±0.5 psig.
Maximum	30 psig.
Connections	Two 1/8 in. -27 FNPT.
Air consumption	27.7 scim (7.5 mL/s).
Air capacity	48 scim.
Adjustments	Minor “zero” adjustment only.
Calibration	None; factory calibrated.
Mounting	External mounting ears are provided for easy mounting to panels or ducts.
Dimensions	2-5/8 H x 3-1/16 W x 1-3/4 D in. (66 x 78 x 45 mm).
Weight	15 oz.

Accessories

Model No.	Wholesale Model No.	Description
N4-32	20-944	Tee restrictor for copper or plastic tubing.
N100-0010	21-038	Tee restrictor for plastic tubing.
N100-2501	21-153	In-line restrictor.
—	2890-001	2” overlay kit.
—	2890-002	2-1/2” overlay kit.
—	2890-003	3-1/2” overlay kit.

Typical Applications

Figure 1 Typical Piping Diagram.

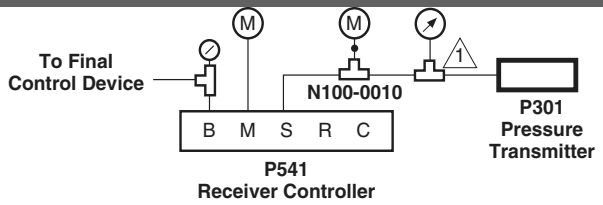

1 Receiver Gauge scale to match Transmitter

Differential or Static Pressure Transmitters

The P323 Series differential or static pressure transmitters have been designed to sense differential or static pressure across fans, coils, filters, or between two reference points and to transmit a 3 to 15 psig signal to controlling and indicating devices such as receiver controllers, receiver gages, and sensitive pressure switches.

These devices are one-pipe transmitters which require an external restrictor in the supply line. Their design features pneumatic feedback, which ensures accuracy and stability over the entire operating range. Mounting ears are provided for strain-free mounting on ducts or other flat surfaces.

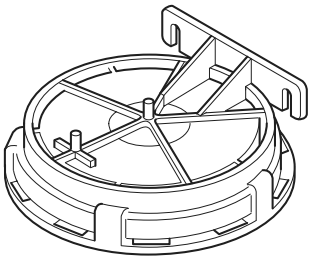

Features:

- Permits remote readout and control of differential or static pressure of air.
- Five different ranges permit proper match of transmitter range to various applications.
- Ball-in-seat pneumatic feedback assures linearity and responsiveness.
- Field-accessible “zero” adjustment.

Model Chart

Model No.	Wholesale Model No.	Range W.C. (Pa)
P323-0025	2323-505[a]	-0.05 to +0.20 in. (-12.45 to 49.8)
P323-01	2323-503[a]	-0.5 to +0.5 in. (124.5 to 124.5)
P323-101	—	0 to 1 in. (0 to 249)
P323-03	2323-500[a]	0 to 3 in. (0 to 747)
P323-10	2323-504[a]	0 to 10 in. (0 to 2490)

[a] Includes one each 2 in., 2-1/2 in., and 3-1/2 in. gauge overlay in the appropriate range.

Specifications

Control action	Direct, proportional.
Pressure output	3 to 15 psig (20.7 to 103.5 kPa) for stated span.
Environment	
Maximum ambient temperature	140°F (60°C).
Locations	Avoid areas with excessive vibration or corrosive materials.
Supply air pressure	Clean, dry, oil free air required (refer. EN-123).
Nominal	20 psig (138 kPa).
Maximum	30 psig (207 kPa).
Connections	Nipples for 1/4 in. O.D. polyethylene tubing except LO and HI ports which require 3/8 in. O.D. polyethylene tubing.
Main air consumption	27.7 scim (7.5 mL/s).

Specifications (Continued)

Air capacity	48 scim.
Calibration	Factory set.
Mounting	Transmitter must be mounted in a horizontal position with the correct side up.
Dimensions	5-9/16 H x 5-5/16 W x 2-11/16 D in. (141 x 135 x 69 mm).
Weight	0.5 lb (227 g).

Accessories

Model No.	Wholesale Model No.	Description
A251-1	A253-12	2-1/2 in. gauge.
A252	2422-002	3-1/2 in. gauge.
A253-12	2422-003	2 in. gauge.
AP-302	—	Static pressure sensing tip — 1/4 in. O.D. tubing.
AP-305	—	Static pressure sensing tip, 1/8 in. pipe thread.
N4-32	20-944	Tee restrictor for copper or plastic tubing.
N100-0010	21-038	Tee restrictor for plastic tubing.
N100-2501	21-153	In-line restrictor.

Receiver Gauge Overlays

Model No.	Wholesale Model No.	Description
23-63	—	2 in. 0 to 3 in.
24-63	21-768	2-1/2 in. 0 to 3 in.
25-63	21-773	3-1/2 in. 0 to 3 in.
23-62	21-763	2 in. -0.5 to +0.5 in.
24-62	21-767	2-1/2 in. -0.5 to +0.5 in.
25-62	21-772	3-1/2 in. -0.5 to +0.5 in.
23-64	21-765	2 in. 0 to 10 in.
24-64	—	2-1/2 in. 0 to 10 in.
25-64	—	3-1/2 in. 0 to 10 in.
24-66	—	3-1/2 in. -0.05 to +0.20 in.
25-66	—	3-1/2 in. -0.05 to +0.20 in.
23-92	—	2 in. 0 to 1 i n.
24-92	—	2-1/2 in. 0 to 1 in.

Typical Applications

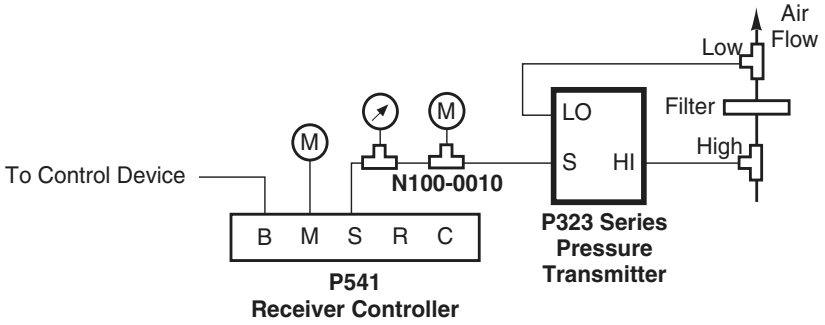

Figure 1 Differential Pressure Transmitter Application.

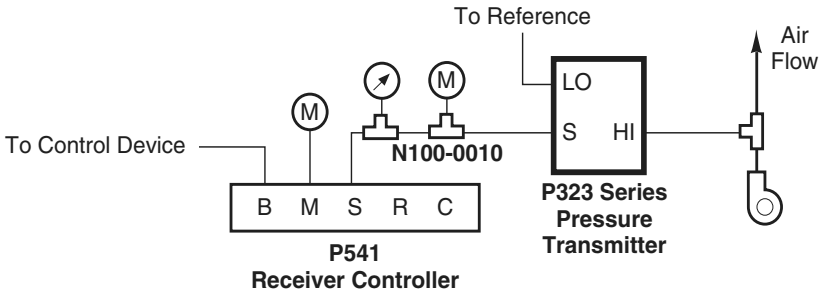

Figure 2 Static Pressure Transmitter Application.

TAC PNEUMODULAR® Receiver Controller

The receiver controllers are used with remote pneumatic transmitters to provide proportional control in pneumatic control systems. They are designed primarily for use with pneumatic transmitters; however, they may be used with any pneumatic device having an output of 3 to 15 psig, such as thermostats or humidistats. Both direct and reverse acting models are available and each device is of the dual-input type, with remote setpoint capability. These devices may be used as single input devices by using only the desired input.

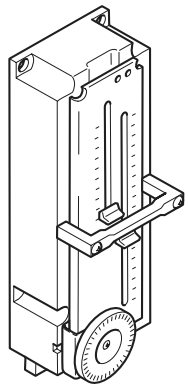

Receiver-Controller

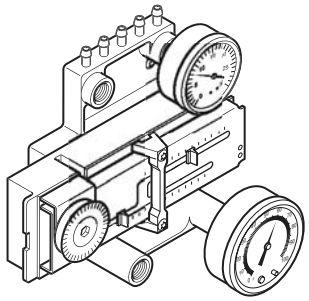

Receiver-Controller Mounted on Base
(gauges ordered separately)

Features:

- Nozzle and flapper relay- type receiver-controller; linear, stable and responsive. Three inputs for primary, reset, and remote control point adjustment (may be used with one or two inputs).
- Slide-type throttling range and authority adjustments are easy to use, require no tools. Easy setpoint calibration.
- Five barbed connections for 1/4 in. O.D. plastic tubing.
- Setpoint dials available to match transmitter ranges.
- Available in direct-acting and reverse-acting models.
- Direct-acting models have a built-in low-limit feature. Reverse-acting models have a built-in high-limit feature.
- Designed for mounting on TAC PNEUMODULAR Socket MCS-S; may be mounted as stand-alone controller with K504 Mounting Bracket or P541-BASE.

Model Chart

Kits.

Model No.	Wholesale Model No.	Action	Description
P541	2341-501	Direct	Direct Acting Receiver Controller only
P541-RA	2341-502	Reverse	Reverse Acting Receiver Controller only
P541-DA-B	2341-521	Direct	Direct Acting Receiver Controller (P541) mounted to a Base P541-BASE
P541-RA-B	2341-522	Reverse	Reverse Acting Receiver Controller (P541-RA) mounted to a Base P541-BASE
P541-BASE	—	Not applicable	Mounting Base, Gasket and Mounting Screws

Setpoint Dial Labels (order separately).

Model No.	Wholesale Model No.	Fahrenheit	Model No.	Wholesale Model No.	Celsius
300-25	21-450	0 to 100°F	300-37	—	-18 to 38°C
300-26	21-451	-40 to 160°F	—	—	—
300-27	21-452	40 to 140°F	300-39	—	4 to 60°C
300-28	21-453	40 to 240°F	300-38	—	4 to 116°C
300-29	21-454	50 to 90°F	300-41	—	10 to 32°C
300-31	21-456	-25 to 125°F	—	—	—

Setpoint Dial Labels (order separately, continued).

Model No.	Wholesale Model No.	Range	Model No.	Wholesale Model No.	Range
300-33	21-458	0 to 2 in. W.C.	300-58	21-884	0 to 300 psig
300-34	21-459	0 to 7 in. W.C.	300-70	21-889	0 to 50 psig
300-35	21-460	30 to 80% R.H.	300-71	—	0 to 100 psig
300-46	21-790	-0.5 to +0.5 in. W.C.	300-72	21-890	0 to 100% R.H.
300-95	—	0 to 1.0 in. W.C.	300-80	21-891	0 to 2000 FPM
300-47	21-791	0 to 3 in. W.C.	300-81	—	0 to 3000 FPM
300-48	21-792	0 to 10 in. W.C.	300-82	—	0 to 4000 FPM
300-52	21-793	30 to 80°F	300-83	21-894	0 to 5500 FPM
300-54	21-881	-0.05 to +0.2 in. W.C.	300-84	—	0 to 3.45 Bar
300-56	—	-10 to 40 psig	300-86	—	50 to 100°F
300-57	—	0 to 150 psig			

Specifications

Construction	Glass-filled nylon.
Control action	Direct acting or reverse acting, determined by model selection.
Supply air pressure	Clean, dry, oil free air required.
Normal	4 to 22 psig (28 to 152 kPa).
Maximum	30 psig (207 kPa).
Air consumption	36 scim (9.8 mL/s), maximum.
Air flow capacity	13824 scim (3774 mL/s).
Connections	Barbed nipples for 1/4 in. O.D. polyethylene or 5/32 in. I.D. polyurethane tubing.
Authority	Adjustable; 10 to 300% of primary signal input.
Reset action	Port R (reset signal) provides reverse reset. To obtain direct reset requires P541-RA with 60% authority and 40% throttling range to reverse the transmitter's 3 to 15 psi signal to 15 to 3 psi.
Throttling range	Adjustable; 2 to 40%/12 psi.
Setpoint	Adjustable; graduated dial with 0.25 psi divisions.
CPA (remote setpoint adjustment)	±10% of primary transmitter span.
Ambient temperature limits	40 to 140°F (4 to 60°C).
Mounting	Designed for use on MCS-S manifold socket. These devices can also be surface mounted by using an optional K504 mounting bracket or by ordering with base option.
Dimensions	
P541	1-63/64 H x 5-25/32 W x 2-1/4 D in. (50 x 147 x 57 mm).
K504	5-1/2 H x 4-1/2 W x 2 D in. (140 x 114 x 51 mm).
P541-BASE & P541-RA-BASE	3-5/8 H x 5-13/16 W x 3-3/4 (136 x 148 x 95 mm).

Accessories

Model No.	Wholesale Model No.	Description
K504	22-152	Mounting bracket.
K541	22-171	Cover.
N2-4	20-881	Calibration wrench.
N100-0010	21-038	Restrictor tee for use with 1/4 in. polyethylene or 5/32 in. polyurethane tubing.
N100-2501	21-153	In-line restrictor.
N100-2597	900-012	Calibration kit.
MCS-GMF	22-139	Gauge mounting fitting (for use with K504 Mounting Bracket).
S510	2390-501	Gradual switch.
S511-5	2390-505	Minimum switch position.
S511-10	2390-510	Minimum switch position.

Typical Applications

Active Connections.

Port	Connected to
B	Branch output.
M	Main air.
S	Primary signal input.
R	Reset signal input.
C	Control point adjustment.

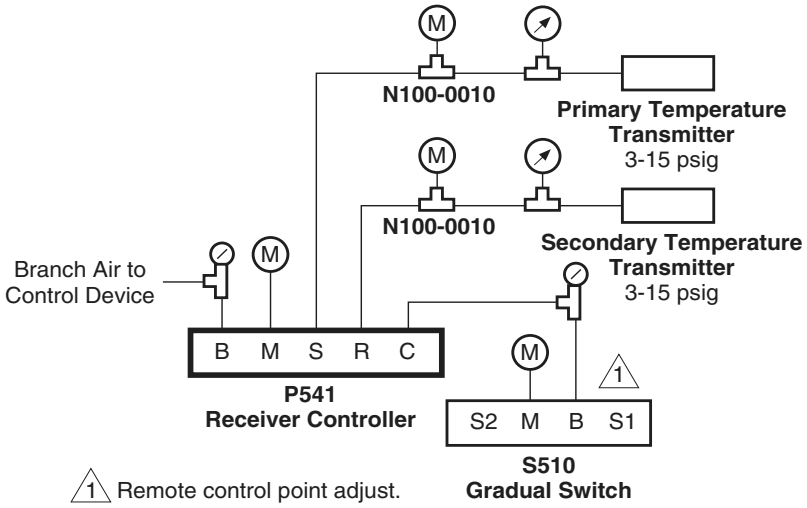

Figure 1 Typical Application.

Pneumatic to Electric Pressure Switches, Two-Position

For on-off control of electrical devices such as air compressors, fans, pilot lights, etc., by the use of a predetermined air pressure signal.

Features:

- A variety of Pressure-to-Electric (P.E.) Switches permits two-position electrical switching from either modulating or two-position pneumatic signals.
- Models are available with either fixed or adjustable differentials and with several different switch actions, permitting selection of the best model for almost any required application.
- May be wall-mounted or panel-mounted where necessary to keep wiring runs short.

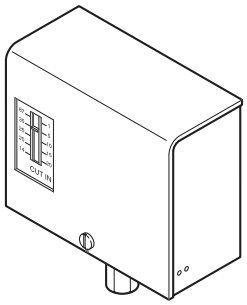

PC-110 shown

†PC-110 only CSA certified

Model Chart

Model No.	Wholesale Model No.	Mounting	Switch Action	Scale Range psig (kPa)		Differential psig (kPa)		Ambient Temp. Limits °F (°C)	Max. Input psig (kPa)	Dimensions in. (mm) H x W x D
PC-110	PC-110	Surface or track	SPDT makes N.O. contact to common on pressure increase	1 to 20 (7 to 138)		1 to 5 (7 to 34) adjustable factory set at 2 (14)		-40 to 150 (-40 to 118)	50 (345)	3-1/2 x 3-1/8 x 2-1/8 (89 x 79 x 54)
PC-131	PC-131	Surface	DPST opens on pressure rise	3 to 30 (21 to 207)		1-1/2 to 20 (10 to 138) adjustable		32 to 140 (0 to 78)		4-1/4 x 4 x 2-9/32 (108 x 102 x 58)
PC-132	PC-132		DPST opens on pressure drop	3 to 30 (21 to 207)		1-1/2 to 20 (10 to 138) adjustable				4-1/4 x 4-1/8 x 3-1/2 (108 x 105 x 89)
PC-151	PC-151		3 SPST opens on pressure rise	Sw.	Open	Sw.	Fixed		150 (1034)	3-1/4 x 5-3/8 x 3-1/2 (83 x 137 x 89)
				1	6 (41)	1	3 (21)			
				2 and 3	18 (124)	2 and 3	0.5 (3)			

Specifications

Case	Metal with 1/2 in. conduit opening.
Diaphragm	Non-metallic, positioned by air pressure changes to actuate switches.
Connections	
Air	1/8 in. FNPT, except PC-131 and PC-132 1/8 in. male NPT.
Electrical	Coded screw terminals.
Electrical Ratings	Refer to Electrical Ratings Table.
Location	NEMA 1.

Electrical Ratings.

Model No.	Volts (Vac)	FLA Amps	LRA Amps	Non-Ind. Amps	Pilot Duty VA
PC-110	24	—	—	16	100
	120	13.8	82.8	16	650
	208	9.6	57.6	9.6	750
	240	8.3	49.8	8.3	750
	277	—	—	7.2	—
PC-131 PC-132	120	12	72	12	125 at 120/600 Vac
	208	12	72	12	
	240	12	72	12	
	277	—	—	12	
PC-151	120	6	36	10	125 at 24/277 Vac
	208/240	3	18	8	
	277	—	—	7.2	

Accessories

Model No.	Description
For PC-110 only	
AK-52582	Bracket for track mounting.
AD-8953	Track.

Differential Pressure Transmitter

For transmitting a fixed span 3 to 15 psig (21 to 103 kPa) pneumatic signal which is proportional to a differential pressure being sensed. The output signal can be used as an input for receiver-controllers or gauges for differential pressure indication.

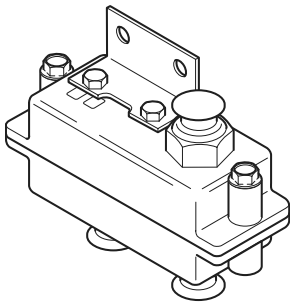

Features:

- Permits remote readout of differential water pressure on receiver-gauge, and control from a convenient location.
- Provides differential pressure readout on a single receiver gauge (eliminates need to read two pressure gauges and subtract one reading from the other).
- Two different ranges permit proper match of transmitter range to application.
- Field-adjustable “zero” adjustment.

Model Chart

Model No.	Wholesale Model No.	Differential Pressure Sensed psi (kPa)	Max. Differential Pressure psig (kPa)
PKSR-9001	2302-051[a]	0 to 50 (0 to 345)	85 (586)
PKSR-9002	2302-101[a]	0 to 100 (0 to 690)	150 (1034)

[a] Includes one each 2 in., 2-12 in., and 3-1/2 in. gauge overlay in the appropriate range.

Specifications

Transmitter	Non-relay.
Construction	Zinc die-cast case, brass fittings.
Sensed medium	Water, air, steam, oil.
Maximum total pressure (any input)	300 psig (2069 kPa).
Zero adjustment	Output to 3 ±1/4 psig (21 ±2 kPa) with input pressures equalized.
Output air signal	3 to 15 psig (21 to 103 kPa), span fixed.
Action	Direct.
Environment	
Ambient temperature limits	Shipping and storage: -40 to 140°F (-40 to 60°C). Operating: 40 to 120°F (4 to 49°C).
Humidity	5 to 95% RH, non-condensing.
Supply air pressure	Clean, oil free, dry air required (reference EN-123).
Nominal	20 psig (138 kPa).
Maximum	30 psig (207 kPa).
Connections	1/8 in. FNPT.
Air consumption for sizing air compressor	27.6 scim (7.5 mL/s) at 20 psig (138 kPa).
Air capacity for sizing air mains	48 scim (13.1 mL/s) at 20 psig (138 kPa).
Mounting	In any position with integral bracket provided.
Dimensions	2-11/16 H x 3-3/4 W x 1-19/32 D in. (68 x 95 x 40 mm).

Accessories

Model No.	Wholesale Model No.	Description
A251-1	2422-001	Receiver gauge.
A252	2422-002	Receiver gauge.
A253-12	2422-003	Receiver gauge.
AT-532-098-1-1		Restrictor tee for 1/4 in. copper compression fitting.
AT-532-098-1-2		.005" restrictor (Red).
AT-532-098-1-3		.010" restrictor (Blue).
N100-0010	21-038	Restrictor tee for use with 1/4 in. or 5/32 in. I.D. plastic tubing.
N100-2501	21-153	In-line restrictor.
N4-32	20-944	Restrictor tee, copper tubing.

Receiver Gauge Overlays

Model No.	Wholesale Model No.	Description
23-62	21-763	2 in. -0.5 to +0.5 in.
23-63	21-764	2 in. 0 to 3 in.
23-64	—	2 in. 0 to 10 in.
23-92	—	2 in. 0 to 1 in.
24-62	21-767	2-1/2 in. -0.5 to +0.5 in.
24-63	21-768	2-1/2 in. 0 to 3 in.
24-64	—	2-1/2 in. 0 to 10 in.
24-66	—	2-1/2 in. -.05 to +0.20 in.
25-62	21-772	3-1/2 in. -0.5 to +0.5 in.
25-63	21-773	3-1/2 in. 0 to 3 in.
25-64	—	3-1/2 in. 0 to 10 in.
25-66	—	3-1/2 in. -.05 to +0.20 in.

Typical Applications

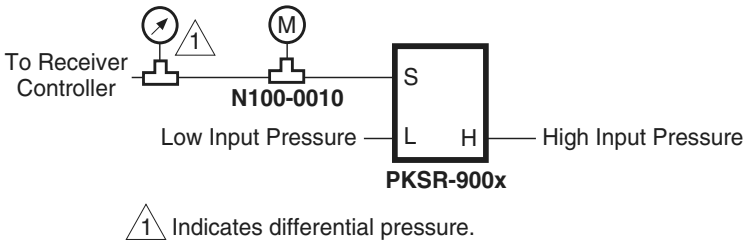

Figure 1 PKSR-900x Piping Connections.

High Pressure Selector Relay and Low Pressure Selector or Booster Relay

The pressure selector relays are designed for use in pneumatic control systems where the application requires the comparison, selection, and transmission of the higher or lower of two proportional signals. R432-11 can also be used as a booster relay.

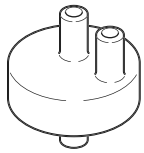

R432-2
High Pressure Selector

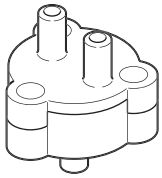

R432-11
Low Pressure Selector or Booster Relay

Features:

- Relays are non-adjustable.
- Precise repeatability characteristics.
- Small size and light weight allow these relays to be mounted “in-line”, supported by the pneumatic tubing.
- R432-2 HP Selector may be used with “restricted” pneumatic signals down to 0.5 SCFH airflow.
- R432-11 may be used as Booster Relay or LP Selector.

Model Chart

Model No.	Wholesale Model No.	Functions	Dimensions in. (mm)	Port Connections	
				Port	Connected to
R432-2	2372-352	Selects the highest of two input signals.	1-1/8 dia. x 31/32 (29 x 25)	B	Branch output
				S1, S2	Input signals
R432-11	2372-351	Selects the lowest of two input signals. Or may be used as volume booster.	1-3/16 dia. x 1-3/16 (30 x 30)	B	Branch output
				S	Input signal
				M	Input signal (piped to main air when used as a volume booster)

Specifications

Action	Proportional.
Construction	Glass-filled nylon.
Ambient temperature limits	35 to 140°F (2 to 60°C).
Supply air pressure	Clean, dry, oil free air required (refer. EN-123).
Nominal	20 psig.
Maximum	30 psig.
Connections	Fittings for 1/4 in. O.D. plastic tubing.
Air consumption	When used as a volume booster.
Main port	29.4 scim (8 mL/s).
Signal port	0.2 scim (0.1 mL/s).
Mounting	In-line.
Dimensions	Refer to Model Chart.

Typical Applications

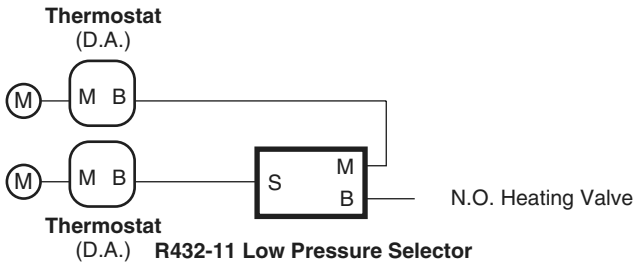

Figure 1 R432-11 Low Pressure Selector Relay.

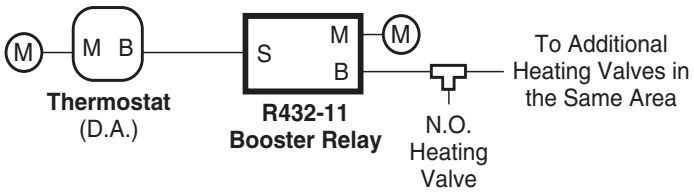

Figure 2 R432-11 Used as Booster Relay.

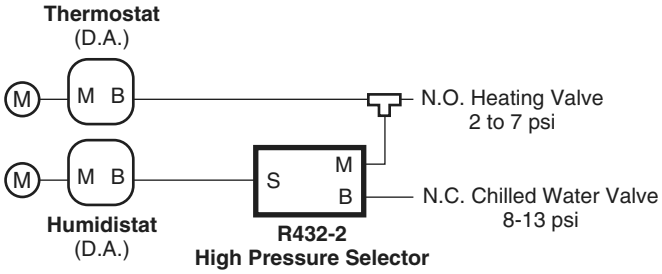

Figure 3 R432-2 High Pressure Selector Relay.

Air Motion Relay

This relay is used to sense suction and/or discharge pressures across a coil or fan and control pneumatic damper actuators or valves piped downstream from this device. By the use of sensing lines located at a fan suction and discharge and piped to the low and high ports of this relay, this device is able to detect whether or not a fan is operating. This same operation can also be detected by using one port of the R435 as a reference port and piping the other port to the fan suction or discharge providing there is a differential pressure of at least 0.15 in. W.C.

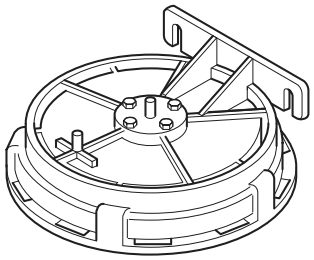

Features:

- Useful for proving fan-operation pneumatically, without the use of electrical devices.
- Originally designed for use with Unit-Ventilators, the R435 may be used to operate diverting relays (such as the R504 Series) for Air-Handling Unit Control Systems.

Model Chart

Model No.	Wholesale Model No.	Description
R435	2374-401	Air Motion Relay.

Specifications

Pressure output	3 to 15 psig (21 to 103 kPa).
Pressure input	Minimum 0.15 in. W.C.(373 Pa) differential.
Environment	
Maximum ambient temperature	140°F (60°C).
Locations	Avoid areas with excessive vibration or corrosive materials.
Supply air pressure	Clean, dry, oil free air required (refer. EN-123).
Nominal	20 psig (103 kPa).
Maximum	30 psig (207 kPa).
Connections	
LO/HI Ports	3/8 in. O.D. plastic tubing.
Signal	1/4 in. O.D. plastic tubing.
Maximum static pressure	12 in. W.C. (2988 Pa).
Main air consumption	27.6 scim (7.5 mL/s).
Air capacity	48 scim. (13.1 mL/s).
Mounting	Transmitter must be mounted in a horizontal position with the correct side up.
Dimensions	5-9/16 H x 5-5/16 W x 2-11/16 D in. (141 x 135 x 69 mm).
Weight	0.5 lb. (227 g).

Accessories

Model No.	Description
AP-302	Static pressure tip — 1/4 in. O.D. tubing.
AP-305	Static pressure tip — 1/8 in. pipe thread.

Typical Applications

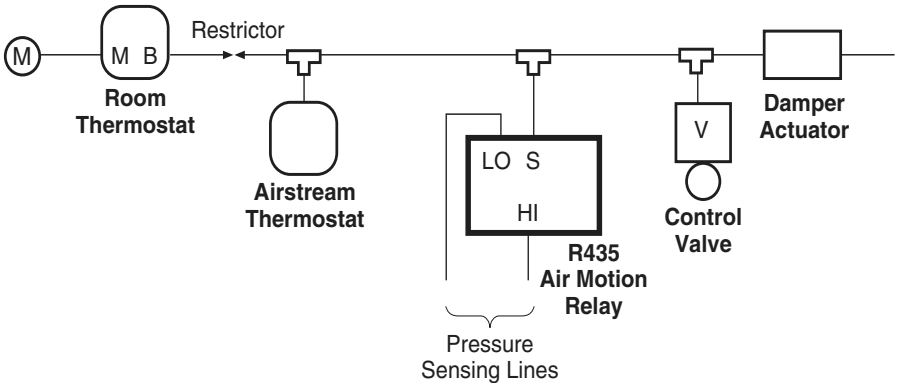

Figure 1 Typical Unit Ventilator Control Application.

Air Differential Pressure Switch

The R436 differential pressure switch is a sensitive and reliable device for remotely sensing the operation of fans or blowers associated with ducted ventilating systems, and for sensing static pressure drop across filters. Pressure differentials as small as 0.05 in. WG are sufficient to actuate the SPDT contacts, which in turn operate remote status indicators, alarms, or control circuits of other devices.

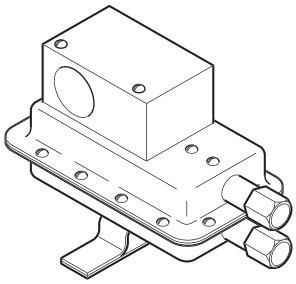

Features:

- Different setpoint adjustable from 0.05 to 12 in. WG to suit various applications.
- The R436 is field adjustable over a wide range of pressures, and is relatively insensitive to temperature extremes. It is recommended for any differential pressure application within its operating range.

Model Chart

Model No.	Wholesale Model No.	Description
R436	2374-410	Air Differential Pressure Switch.

Specifications

Setpoint	Field adjustable 0.05 ±0.02 to 12 in. (1.3 ±0.5 to 305 mm) WG.
Differential	0.02 in. (0.5 mm) WG with increase to 0.8 in. at higher operating pressures.
Maximum pressure	0.5 psig (3.4 kPa).
Electrical switch	SPDT, 300 VA pilot duty at 115 to 277 Vac; 10A non-inductive to 277 Vac.
Connections	Screw terminals with cup washers.
Sampling line connections	Connectors supplied accept 1/4 in. O.D. rigid or semi-rigid tubing; slip-on tubing adaptors available.
Mounting	Diaphragm vertical.
Conduit opening	7/8 in. diameter for 1/2 in. conduit.
Operating temperature limits	-40 to 180°F (-40 to 82°C).
Dimensions	6-1/8 H x 3-7/8 W x 3-1/4 D in. (156 x 98 x 83 mm).
Locations	NEMA 1.

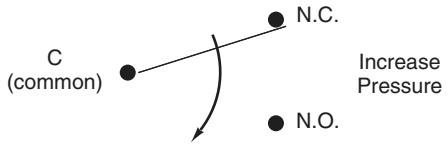

Figure 1 Switch Action and Terminal Identification.

Accessories

Model No.	Description
AP-302	Static pressure sensing tip for 1/4 in. O.D. tubing.
AP-305	Static pressure sensing tip for 1/8 in. pipe thread.

Typical Applications

Diaphragm Connections

Refer to figure below. For positive pressure only, connect sampling line to port E; port F remains open to atmosphere.

For negative pressure only, connect sample line to port F; port E remains open to the atmosphere.

Two positive samples; connect higher pressure to port E and lower pressure to port F.

Two negative samples; connect more negative sample to port E; less negative to port E.

One positive and one negative; positive to port E; negative to port F.

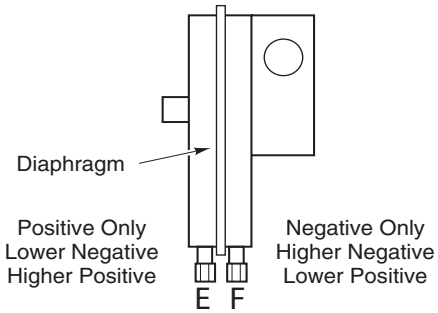

Electrical

Before any pressure is applied to the diaphragm, the switch contact rests in the N.C. position (see figure below). Upon application of sufficient pressure to actuate the switch, the contact transfers to the N.O. position. Connect control, status, and/or alarm circuits, as shown.

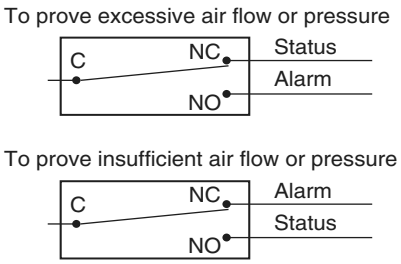

Figure 2 Typical Applications.

Pneumatic-Electric High/Low Alarm Switch

The switch is used to provide high and low signal alarm. Two independently adjustable SPDT switches provide 3 to 15 psig high and low alarm contact capability in this single device.

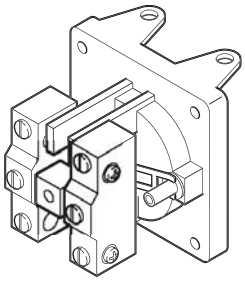

Features:

- The R470 has very narrow switching differential, and can be used with any pneumatic transmitter to set two independent high and low alarm points within the range of the transmitter.
- It can also be used for other pneumatic applications requiring separate adjustment of two independently adjustable electrical switching actions.
- Has two SPDT switches. The switching point of each can be independently adjusted.
- Must be mounted in enclosure.

Model Chart

Model No.	Wholesale Model No.	Description
R470	2386-601	Pneumatic-electric high/low alarm switch.

Specifications

Environment	
Ambient temperature limits	-30 to 160°F (-34.4 to 71.1°C).
Locations	Avoid areas with excessive vibration or corrosive materials.
Supply air pressure	Control air only; clean, dry, oil free air required (Ref. EN-123).
Nominal	3 to 15 psig (21 to 103 kPa) or 3 to 27 psig (21 to 186 kPa).
Maximum	100 psig (689.5 kPa).
Connections	
Air	1/4 in. 18 NPT female.
Wiring	Screw terminals.
Setpoint	Adjustable, 1 to 27 psig (7 to 186 kPa). Each switch set independently by a self-locking, slotted screw.
Switch action	Two single pole, double throw, snap acting switches.
Switch rating	10A at 125/250 Vac, 0.5A at 28 Vdc. (**Note:** Not suitable for switching thermocouples or RTD sensors or loads of less than 120 volts.)
Differential (each switch)	Non-adjustable, 0.05 psig (at lowest setpoint) to 0.25 psig (at highest setpoint) (34 to 1.7 Pa).
Mounting	Two lugs with clearance holes for #10 screws. Mounts in any position.
Dimensions	4-3/4 H x 3-1/2 W x 3-1/2 D in. (120 x 89 x 89 mm).

Typical Applications

Figure 1 Typical Application.

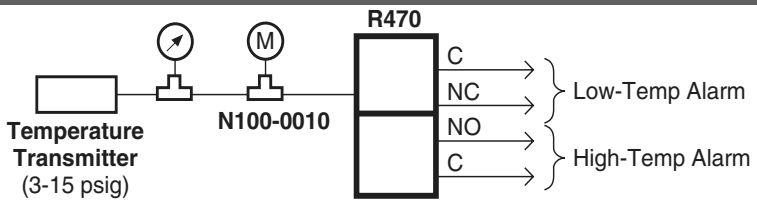

1 Switches operate independently of each other.

Pneumatic-Electric Switches

The pneumatic-electric switches are used in control systems requiring conversion of gradual air pressure changes to positive electrical switching actions. The R471-1 has a single SPDT switch for switching a single circuit. The R472-1 has two SPDT switches for switching two separate circuits simultaneously.

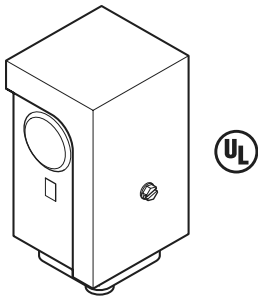

Features:

- Fixed-differential P.E. switches permit two-position electrical switching action from either modulating or two-position pneumatic signals.
- High current rating: 20 amps non-inductive, 120, 240, 480Vac.
- R471-1 has one SPDT switch.
- R472-1 has two SPDT switches which operate simultaneously.
- May be wall-mounted or panel-mounted where necessary to keep wiring runs short.

Model Chart

Model No.	Wholesale Model No.	Description
R471-1	2364-211	Pneumatic-electric relay with (1) SPDT switch.
R472-1	2364-220	Pneumatic-electric relay with (2) SPDT switches.

Specifications

Environment	
Ambient temperature limits	32 to 140°F (0 to 60°C).
Relative humidity limits	5 to 95% RH, non-condensing. Avoid areas with excessive vibration or corrosive materials.
Location	NEMA 1.
Maximum safe pressure	30 psig (206.8 kPa). Clean, dry control air only.
Connections	
Air	3/16 in. (4.76 mm) nipple for 1/4 in. (6.35 mm) O.D. tubing.
Wiring	Screw terminals. 1/2 in. conduit openings on both sides of housing.
Setpoint	
R471-1 (2364-211)	2 to 25 psig (13.8 to 172.4 kPa). Differential 2.0 psi (13.8 kPa) nominal, fixed.
R472-1 (2364-220)	4 to 20 psig (27.6 to 137.8 kPa). Differential 2.5 to 3.0 psi (17.2 to 20.7 kPa) nominal, fixed.
Switch action	SPDT
Switch rating (each switch)	20 amps non-inductive at 120-240-480 Vac. 1 hp at 125 Vac, 2 hp at 240 Vac.
Mounting	Relay may be mounted in any position.
Dimensions	3-11/16 H x 2-1/2 W x 2-7/16 D in. (94 x 64 x 62 mm).

Accessories

Model No.	Wholesale Model No.	Description
6-532	20-684	Diaphragm.

Typical Applications

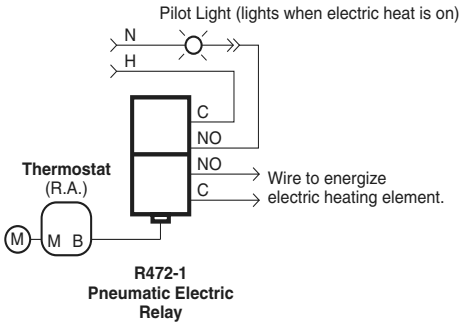

Figure 1 Typical Application (R472-1 shown).

TAC PNEUMODULAR® Integral Relay with Capacity Tank

The integral relay is a modulating device used with a proportional controller in applications where it is necessary to maintain the value of a controlled variable within close limits. Integral action added to proportional control allows the use of a wider proportional controller throttling range to avoid hunting while simultaneously minimizing or eliminating the offset (of the actual control point from the desired setpoint) that is inherent in proportional control alone. When integral action is added to proportional control, the result is proportional plus integral control, frequently referred to as PI control or automatic reset.

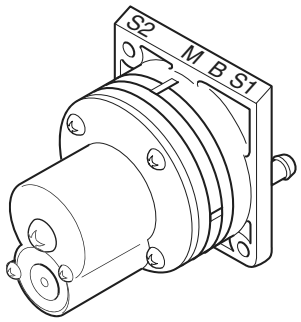

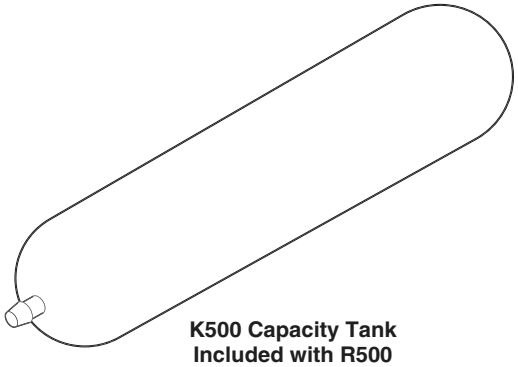

K500 Capacity Tank Included with R500

Features:

- Provides pneumatic PI (proportional-plus-integral) control, when used with pneumatic controllers, or receiver-controllers, having widely adjustable throttling-range. (Optimum PI control requires adjustable throttling-range.)
- Has adjustable integral timing, with minutes-per-repeat scale.
- All ports clearly labeled. Ports align with MCS-S terminals.
- TAC PNEUMODULAR: Mounts on MCS-Socket or K502 Mounting Bracket.

Model Chart

Model No.	Wholesale Model No.	Active Connections	
		Port	Connected to
R500	2351-001[a]	M	Main air
		B	Branch output
		S_1	Input signal from controller
		S_2	Connects to K500 capacity tank 20 cubic in. (328 cubic cm)

[a] Includes plastic mounting strap and adhesive backed mounting base.

Specifications

Construction	Glass-filled nylon.
Maximum ambient temperature	140°F (60°C).
Supply air pressure	Clean, dry, oil free air required (Ref. EN-123).
Nominal	20 psig (138 kPa).
Maximum	30 psig (207 kPa).
Connections	Barbed nipples for 1/4 in. O.D. polyethylene or 5/32 in. I.D. polyurethane tubing.
Air consumption	1728 scim (472 mL/s).
Air flow capacity	230.4 scim. (62.9 mL/s).
Calibration	Yes.
Adjustments	Timing of integral action is adjustable from FAST to OFF, with approximate dial marks of 0.2, 0.3, 0.7, 1.0, 5.0, and 15 minutes.
Mounting	Designed for use on MCS-S manifold socket. This device can also be field mounted by using the K502 mounting bracket.

Specifications (Continued)

Dimensions

R500	2-1/16 H x 1-7/8 W x 2-9/16 D in. (52 x 48 x 66 mm).
K500	7-1/2 L x 2 Dia. in. (191 x 51 mm).

Accessories

Model No.	Wholesale Model No.	Description
K500		Replacement timing tank kit.
K502	22-150	Optional mounting bracket.
TOOL-082	—	5/64 in. hex wrench.

Typical Applications

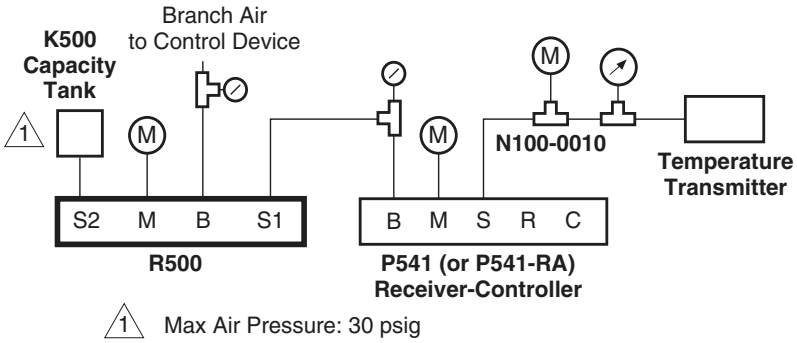

Figure 1 Typical Application.

TAC PNEUMODULAR® Diverting Relays

The R503-1 and R503-2 diverting relays are snap-acting devices with adjustable setpoints. They are designed for a variety of switching and interlocking functions in pneumatic control systems where the application requires one or more of the following functions: feeding and exhausting branch lines, diverting a supply line to either one of two branch lines, or diverting one of two supply lines to one branch line. The primary function of these devices is to convert a proportional pneumatic signal, at a predetermined setting, into a positive pneumatic switching action.

The R-503-3 is a non-adjustable, snap-acting, signal-comparing diverting relay designed for use in pneumatic control systems where the application requires a pneumatic switching function based on the comparison of two proportional pneumatic input signals.

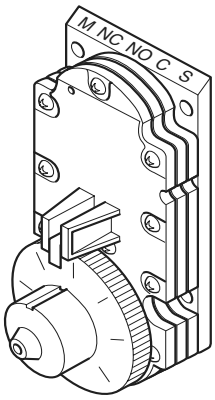

R503-1, R503-2 Shown

Features:

- All R503 Series Relays provide positive two-position snap-action, provide SPDT pneumatic switching. Require main air supply.
- R503-1 and R503-2 have setpoint dial with PSIG markings.
- R503-1 has narrow differential; to be piloted by transmitter signals.
- R503-2 has wide differential; to be piloted by controller signals.
- R503-3 compares two (usually transmitter) signals; provides narrow differential switching based on the signal comparison.
- All ports clearly labeled. Ports align with MCS-S terminals.
- TAC PNEUMODULAR: Mounts on MCS-Socket or K503 Mounting Bracket.

Model Chart

Model No.	Wholesale Model No.	Type	Differential psi (kPa)	Setpoint Range psig (kPa)	Switching Action	Dimensions in. (mm) H x W x D
R503-1	2353-501[a]	SPDT	0.2 to 0.6 (1.4 to 2.8)	3[b] to 20 (21 to 138)	Port S at setpoint minus diff.: ports NO and C are connected. Port S at setpoint: ports NC and C are connected.	4-1/8 x 1-31/32 x 3-9/64 (105 x 50 x 80)
R503-2	2353-502[a]		2 to 4 (14 to 28)	4.5 [b] to 20 (31 to 138)		4-1/2 x 1-31/32 x 2-55/64 (114 x 50 x 73)
R503-3	2353-503[a]		0.2 to 0.6 (1.4 to 2.8)	None adjustable	Port S2 is approx. 0.3 psi (2.1 kPa) greater than port S: ports C and NO are connected. Port S greater than or equal to that at Port S2: ports C and NC are connected.	4-1/8 x 1-31/32 x 3-9/64 (105 x 50 x 80)

[a] Includes two plastic mounting straps and adhesive backed mounting plastic.

[b] DO NOT SET below this value.

Specifications

Control action	Refer to Model Chart.
Construction	Glass-filled nylon.
Maximum ambient temperature	140°F (60°C).
Supply air pressure	Clean, dry, oil free air required.
Nominal	15 to 25 psig (103 to 172 kPa).
Maximum	30 psig (207 kPa).
Connections	Barbed nipples for 1/4 in. O.D. polyethylene tubing.
Air consumption	29 scim(7.9 mL/s).
Air flow capacity	60 scfh (1.7 scmh).
Adjustments	Knob operates over two revolutions. A moving pointer slide is provided to indicate both inner and outer scales.
Mounting	Designed for use on MCS-S manifold socket. These devices can also be surface mounted by using the K503 mounting bracket.
Dimensions	Refer to Model Chart.

Active Connections

Port	Description
M	Main.
S	Signal.
S2	Signal 2 (R503-3 only).
C	Common.
NO	Normally open.
NC	Normally closed.

Accessories

Model No.	Wholesale Model No.	Description
K503	22-151	Optional mounting bracket.
TOOL-082	—	5/64 in. hex wrench.

Typical Applications

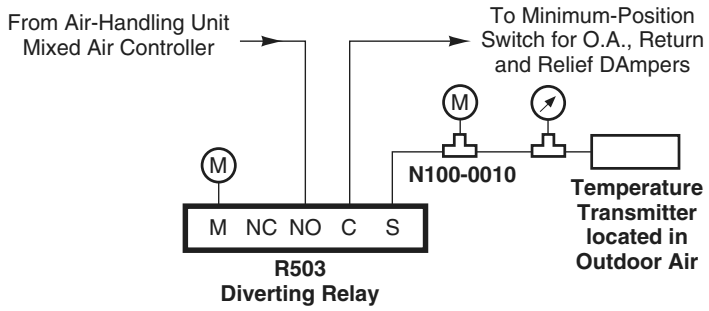

Figure 1 R503-1, R503-2 Typical Application.

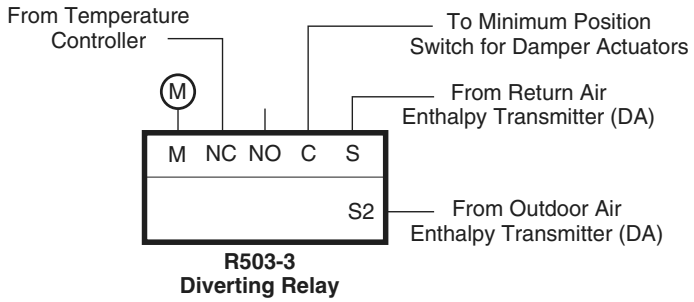

Figure 2 R503-3 Typical Application.

TAC PNEUMODULAR® Diverting Relays

The R504 Series diverting relays are snap-acting devices designed for a variety of switching and interlocking functions in pneumatic control systems where the applications may require one or more of the following functions: feeding and exhausting branch lines, diverting a supply line to either one of two branch lines or diverting either one of two supply lines to one branch line.

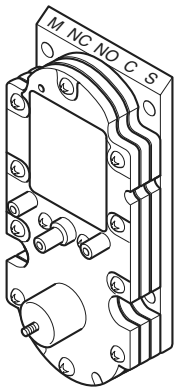

Features:

- All R504 Series Relays provide positive two-position snap-action. No main air connection required.
- Some competitive relays, that are claimed to be snap-acting, are not.
- R504-1 and R504-2 are the same relay with different factory settings; provide SPDT pneumatic switching.
- R504-3 and R504-4 are the same relay with different factory settings; provide DPDT pneumatic switching (switch two separate pneumatic circuits simultaneously).
- Switching point adjustable with 1/16 in. hex wrench.
- All ports clearly labeled. Ports align with MCS-S terminals.
- TAC PNEUMODULAR: Mounts on MCS-Socket or K503 Mounting Bracket.

Model Chart

Model No.	Wholesale Model No.	Switching Action	Range psig	Action
R504-1	2354-501[a]	SPDT	4 to 8	Below 4 psig: NO and C are connected. Above 8 psig: NO and C are connected.
R504-2	2354-502[a]		18 to 22	Below 16 psig: NO and C are connected. Above 20 psig: NC and C are connected.
R504-3	2354-503[a]	DPDT	4 to 8	Below 4 psig: NO and C are connected. NO2 and C2 are connected. Above 8 psig: NC and C are connected. NC2 and C2 are connected.
R504-4	2354-504[a]		18 to 22	Below 16 psig: NO and C are connected. NO2 and C2 are connected. Above 20 psig: NC and C are connected. NC2 and C2 are connected.

[a] Includes two plastic mounting straps and adhesive backed mounting plates.

Specifications

Control action	Refer to Active Connections Table.
Construction	Glass-filled nylon.
Maximum ambient temperature	140°F (60°C).
Supply air pressure	Clean, dry, oil free air required (Ref. EN-123).
Maximum	30 psig (207 kPa).
Connections	Barbed nipples for 1/4 in. O.D. polyethylene or 5/32 in. I.D. polyurethane tubing.
Air flow capacity	60 scfh (1.7 scmh).
Adjustments	The differential band (fixed at 4 psig) switch-over point may be adjusted between 4 to 8 psig and 18 to 22 psig respectively by means of 1/16 in. hex wrench.
Mounting	Designed for use on MCS-S manifold socket. This device can also be surface mounted by using the K503 mounting bracket.
Dimensions	4-1/8 H x 1-31/32 W x 2-61/64 D in. (105 x 50 x 80 mm).

Active Connections

Port	Description
C	Common.
C_2 [a]	Common no. 2.
NO	Normally open.
NO_2 [a]	Normally open no. 2.
NC	Normally closed.
NC_2 [a]	Normally closed no. 2.
S	Input signal.

[a] R504-3 and R504-4 only.

Accessories

Model No.	Wholesale Model No.	Description
K503	22-151	Mounting bracket.

Typical Applications

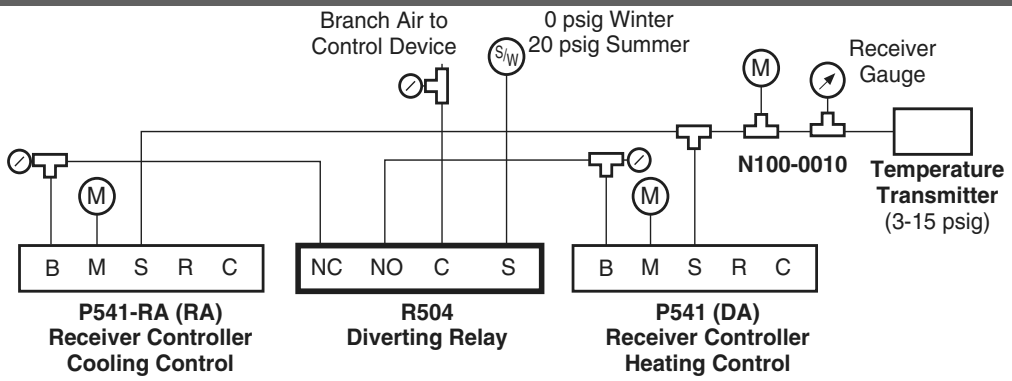

Figure 1 Typical Application.

TAC PNEUMODULAR® Reversing Relay

The reversing relay is a proportioning device designed for use in pneumatic control systems where the application requires the reversing of a proportional signal from a controlling device. The R516 branch line pressure decreases in direct proportion to an increase in input signal pressure and also amplifies the volume of air available for the final control device, thereby minimizing system lag.

The unit is factory calibrated to decrease the branch line pressure from 16 psig to 0 psig as the signal pressure increases from 0 psig to 16 psig.

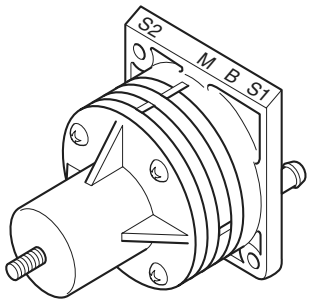

Features:

- Clearly marked connections eliminate the need to memorize port numbers: M (Main), B (Branch), and S1 (Input Signal).
- A bias adjustment is provided which can be used to advance or retard the output signal as required for specific applications (refer to Figure 2).
- The R516 may be used as part of the TAC PNEUMODULAR®, panel-mounted, modular control system, or individually, using a K502 manifold backplate and its barbed tubing connections or MCS-Socket.
- Ports align with MCS-S terminals.

Model Chart

Model No.	Wholesale Model No.	Description
R516	2360-501[a]	Reversing Relay.

[a] Includes plastic mounting strap and adhesive backed mounting plate.

Specifications

Control action	Proportional — reverses input signal.
Construction	Glass-filled nylon.
Maximum ambient temperature	140°F (60°C).
Supply air pressure	
Nominal	20 psig (1.38 bar).
Maximum	30 psig (2.07 bar).
Connections	Barbed nipples for 1/4 in. O.D. polyethylene or 5/32 in. I.D. polyurethane tubing.
Main air consumption	29.3 scim (8.01 mL/s).
Air flow capacity	230 scim (62.8 mL/s).
Adjustments	Crossover point, factory set at 8 psig (.55 bar) (8 psig input = 8 psig output), field adjustable 2 to 15 psig (0.138 to 1.03 bar).
Mounting	Designed for use on MCS-S-P socket assembly. This device can also be surface mounted by using the K502 mounting bracket.
Dimensions	2-1/16 H x 1-7/8 W x 2-9/64 D (52.4 x 47.6 x 54.4 mm).

Active Connections

Port Designation	Connected to
M	Main air.
B	Branch output.
S1	Input signal.
Note: S2 port is inactive.	

Accessories

Model No.	Wholesale Model No.	Description
K502	22-150	Optional manifold backplate.
MCS-S	—	Socket assembly.
TOOL-082	—	5/64 in. hex wrench.

Typical Applications

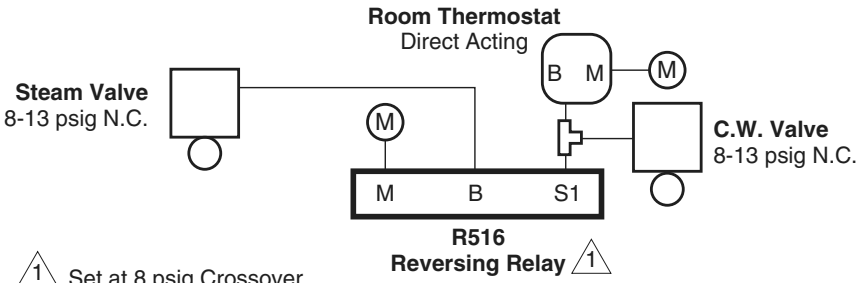

1 Set at 8 psig Crossover

2 On Room Temperature Increase: As thermostat branch (output) pressure increases from 3 to 8 psig, N.C. steam valve modulates from open to closed position. As thermostat branch pressure increases from 8 to 13 psig, N.C. chilled water valve modulates from closed to open position.

Figure 1 Typical Application.

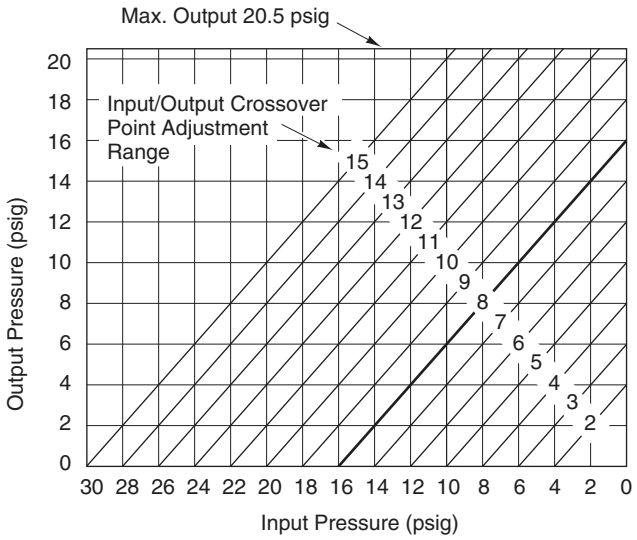

Note: Metric conversion: 6.895 kPa = 1psi

Figure 2 Input vs. Output Pressures.

TAC PNEUMODULAR® Electric-Pneumatic Relays

The electric-pneumatic relays are three-way, two-position, electrically activated air valves for use in pneumatic control systems where the application requires a variety of switching, diverting, or interlocking functions, actuated by an electrical circuit. The R527 Series switches one SPDT pneumatic circuit, while the R528 Series are designed with DPDT pneumatic switching (switches two independent SPDT pneumatic circuits simultaneously).

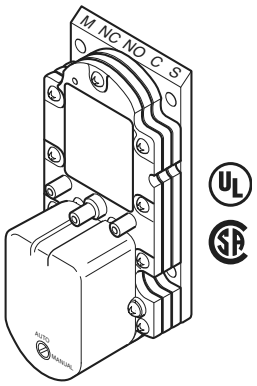

Features:

- R527 Series provides SPDT pneumatic switching (N.C., N.O., C).
- R528 Series provides DPDT pneumatic switching (N.C., N.O., C), plus (N.C.2, N.O.2, C2). Switches two separate circuits simultaneously.
- Manual/auto switch (permits control system testing without starting and stopping electrical equipment).
- All ports clearly labeled. Ports align with MCS-S terminals.
- TAC PNEUMODULAR: Must be mounted on MCS-Socket and used with MCS-EC electrical connector.

Model Chart

Model No.	Wholesale Model No.	Coil Voltage	Switch Action
R527-24DC	2368-500	24 Vdc	SPDT
R527-24	2368-501	24 Vac	
R527-110	2368-502	110 Vac	
R527-230	2368-503	208 to 240 Vac	
R528-24DC	2368-520	24 Vdc	DPDT
R528-24	2368-521	24 Vac	
R528-110	2368-522	110 Vac	
R528-230	2368-523	208 to 240 Vac	

Specifications

Output	3 to 15 psig.
Action	
SPDT models (R527 Series)	Coil de-energized, C and NO are connected. Coil energized, C and NC are connected.
DPDT models (R528 Series)	Coil de-energized, C and NO are connected, C2 and NO2 are connected. Coil energized, C and NC are connected, C2 and NC2 are connected.
Maximum ambient temperature	140°F (60°C).
Supply air pressure	Clean, dry, oil free air required (Ref. EN-123).
Nominal	20 to 25 psig (138 to 172 kPa).
Maximum	30 psig (207 kPa).
Connections	
Air	Barbed fittings for 1/4 in. O.D. polyethylene or 5/32 in. I.D. polyurethane tubing.
Electrical	Purchase separately the MCS-EC contact assembly with screw terminals and the MCS-EB electrical barrier.

Specifications (Continued)

Air consumption	1728 scim (471.7 mL/s).
Air flow capacity	1728 scim (471.7 mL/s).
Power consumption	2.2 VA.
Adjustments	Auto, manual switch.
Mounting	Designed for use on MCS-S manifold socket only.
Dimensions	4-1/8 H x 1-1/32 W x 2-55/64 D in. (105 x 50 x 63 mm).

Active Connections

Port	Connected to
M	Main air.
C	Common.
C2[a]	Common no. 2.
NO	Normally open.
NO2 [a]	Normally open no. 2
NC	Normally closed.
NC2 [a]	Normally closed no. 2.

[a] DPDT models only.
NOTE: A loss of main air pressure will have the same effect as de-energizing the coil.

Accessories

Model No.	Wholesale Model No.	Description
MCS-EC	22-122	Electrical contact assembly.
MCS-EB	22-136	Electrical barrier.

Typical Applications

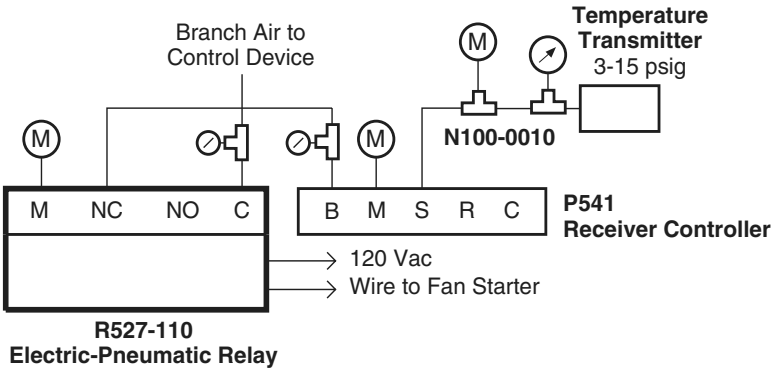

Figure 1 Typical Application.

TAC PNEUMODULAR® Volume Booster/Pressure Selector Relays

The volume booster relay is a proportioning device designed for use in pneumatic control systems where the application requires amplifying the volume of control air to final control devices. System transmission lag is minimized by using this relay in conjunction with a proportional controller operating several diaphragm valves or damper actuators. This device may also be used as a low pressure selector when the application requires the comparison, selection and transmission of the lower of two proportional input signals.

The high pressure selector relay is a device designed for use in pneumatic control systems where the application requires the comparison, selection, and transmission of the higher of two proportional input signals.

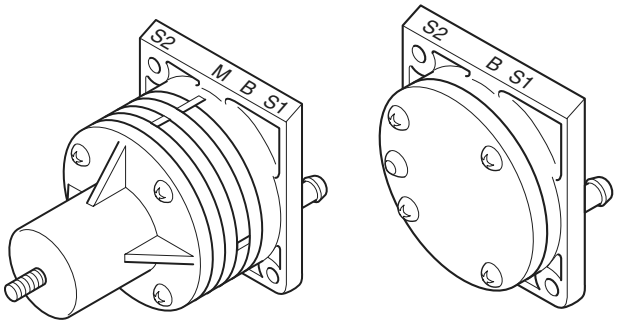

R532-L
2372-501

R532-H
2372-502

Features:

- Both models have barbed fittings.

R532-H

- Two-input high pressure selector; no adjustments.
- All ports clearly labeled.
- Not for use with “restricted” signals (use R432-2).
- TAC PNEUMODULAR: Mounts on MCS-Socket or K502 Mounting Bracket. Due to light weight, may be mounted “in-line”, supported by tubing.

R532-L

- 1:1 booster relay with adjustable bias.
- May be used as low pressure selector (using ports S-1 and M).
- Using S-1 and S-2 inputs (and main air supply at M) may be used as summation (adding) relay.
- All ports clearly labeled. Ports align with MCS-S terminals.
- TAC PNEUMODULAR: Mounts on MCS-Socket or K502 Mounting Bracket.

Model Chart

Model No.	Wholesale Model No.	Description	Port Connections	
			Port	Connected to
R532-H	2372-502[a]	High pressure selector[b]	B	Output
			S_1	Input signal no. 1
			S_2	Input signal no. 2
R532-L	2372-501[a]	Volume booster or low pressure selector	M	Main air or input signal no. 2
			B	Branch output
			S_1	Input signal no. 1

[a] Includes plastic mounting strap and adhesive backed mounting plate.

[b] **CAUTION:** Do not use signals from a low volume signal source such as transmitters, one pipe thermostats, or R77 Series controllers. Use R432-2 for these applications.

Specifications

Control action	Proportional.
Construction	Glass-filled nylon.
Maximum ambient temperature	140°F (60°C).
Supply air pressure	Clean, dry, oil free air required (Ref. EN-123).
Nominal	20 psig (138 kPa).
R532-H maximum	25 psig (172 kPa).
R532-L maximum	30 psig (207 kPa).
Connections	Barbed nipples for 1/4 in. O.D. polyethylene or 5/32 in. I.D. polyurethane tubing.
Main air consumption	29.4 scim (8 mL/s) (applies to R532-L when used as a volume booster only).
Air flow capacity	230 scim (62.8 mL/s).
Adjustments	
R532-L	Output may be advanced or retarded ±5 psi (34.5 kPa).
R532-H	None.
Mounting	On MCS-S manifold socket. For non-manifold mounting use K502 mounting bracket.
Dimensions	
R532-H	2-1/16 H x 1-7/8 W x 61/64 D in. (52 x 48 x 25 mm).
R532-L	2-1/16 H x 1-7/8 W x 2-33/64 D in. (52 x 48 x 64 mm).

Accessories

Model No.	Wholesale Model No.	Description
K502	22-150	Optional mounting bracket.
TOOL-082	—	5/64 in. hex wrench.

Typical Applications

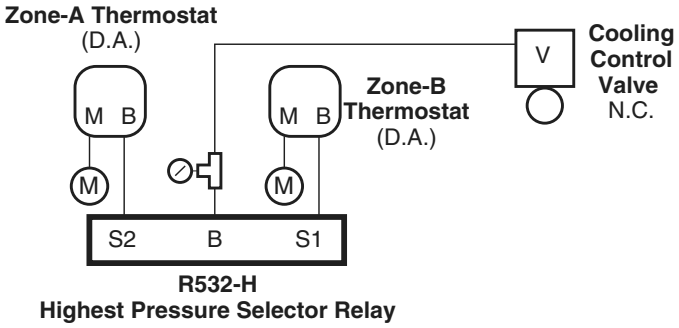

Figure 1 R532-H Typical Application.

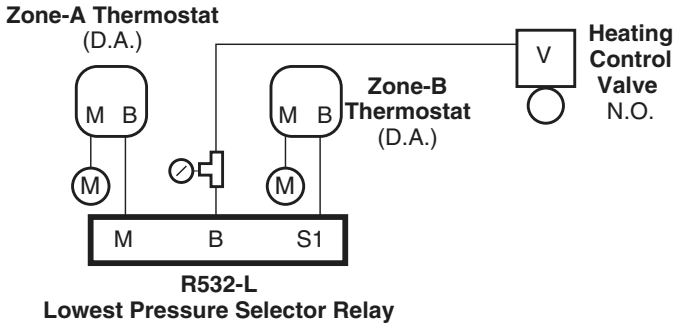

Figure 2 R532-L Typical Application.

TAC PNEUMODULAR® Multi-Input High and Low Selector Relay

The selector relay is a device designed for use in pneumatic control systems where the application requires the comparison, selection, and transmission of the highest and/or the lowest of up to six pneumatic input signals. All input ports are "dead-ended" and no signal air passes through the relay to the output ports.

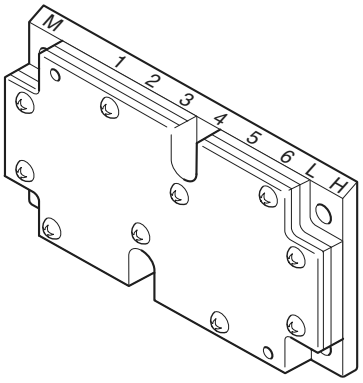

Features:

- Six-input high and low pressure selector. Requires main air connection.
- Highest of 6 inputs is output at Port H.
- Lowest of 6 inputs is output at Port L.
- Inputs numbered 1 through 6.
- All ports clearly labeled. Ports align with MCS-S terminals.
- TAC PNEUMODULAR: Mounts on two MCS-Socket(s) or on one K502 Mounting Bracket.

Model Chart

Model No.	Wholesale Model No.	Port Connections	
		Port	Connected to
R533	2373-501[a]	M	Main air
		L	Lowest branch output
		H	Highest branch output
		1 through 6	Input signals

[a] Includes two plastic mounting straps and adhesive backed mounting plates.

Specifications

Action	Proportional.
Construction	Glass-filled nylon.
Maximum ambient temperature	140°F (60°C).
Supply air pressure	Clean, dry, oil free air required (Ref. EN-123).
Nominal	20 psig (138 kPa).
Maximum	30 psig (207 kPa).
Connections	Barbed fittings for 1/4 in. O.D. polyethylene or 5/32 in. I.D. polyurethane tubing.
Air consumption	43 scim (11.8 mL/s).
Air flow capacity	
HI output port	14.4 scim (3.9 mL/s).
LO output port	28.8 scim (7.8 mL/s).
Adjustments	None.
Mounting	Designed for use on two MCS-S manifold sockets. This device can also be mounted by using the optional K502 mounting bracket.
Dimensions	2 H x 4 W x 1-17/64 D in. (51 x 102 x 32 mm).

Accessories

Model No.	Wholesale Model No.	Description
K502	22-150	Optional mounting bracket.

Typical Applications

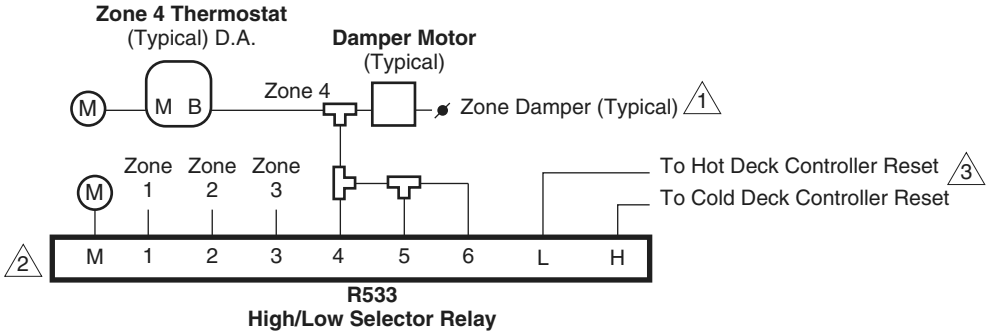

1 Hot Deck: N.O.
Cold Deck: N.C.

2 If all 6 inputs are not used, and if the low (L) output is used, connect the last used input to the remaining unused inputs. This keeps the low (L) output from reading "zero". If only the high (H) output is used, it is not necessary to connect the unused inputs.

3 If either output (L or H) must operate valve or damper actuators, use an R532-L volume-booster relay to increase air capacity for that output on a 1:1 basis.

Figure 1 Typical Application.

TAC PNEUMODULAR® Signal Repeating Relay

The signal repeating relay is a proportioning device for use in pneumatic control systems where it is desirable to repeat a pneumatic signal accurately, such as the output signal from a pneumatic transmitter which must be transmitted to receiver controllers or indicators at multiple locations. In addition to accurately repeating the input signal, use of the relay minimizes transmission lag by increasing the volume of signal air to devices located remotely from transmitter (see Figure 1).

This device may also be used as a signal blocking relay and as a signal limiting relay.

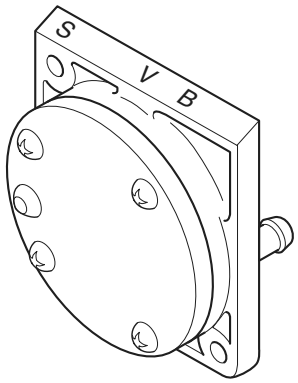

Features:

- Signal-repeating relay; repeats transmitter signal to multiple pneumatic devices at remote locations. No adjustments.
- May be used for signal-blocking applications.
- May be used with two adjustable restrictors as High/Low Signal-Limiting Relay.
- All ports clearly labeled. Ports align with MCS-S terminals.
- TAC PNEUMODULAR: Mounts on MCS-S Socket or K502 Mounting Bracket.

Model Chart

Model No.	Wholesale Model No.	Port Connections	
		Port	Connected to
R534	2379-501	S	Input signal
		B	Branch output
		V	Vent

Specifications

Operation	
Signal repeating application	Restricted main air at port B will accurately track the input pressure at port S.
Blocking application	With no air pressure applied at port S, ports V and B are connected. With air pressure at port S, ports V and B are blocked.
Construction	Glass-filled nylon.
Maximum ambient temperature	140°F (60°C).
Supply air pressure	Clean, dry, oil free air required (Ref. EN-123).
Nominal	20 psig (138 kPa).
Maximum	30 psig (207 kPa).
Connections	Barbed fittings for 1/4 in. O.D. polyethylene or 5/32 in. I.D. polyurethane tubing.
Air consumption	1728 scim (7.9 mL/s).
Air flow capacity	1728 scim (7.9 mL/s).
Adjustments	None.
Mounting	Designed for use on MCS-S manifold socket. This device can also be mounted by using the K502 mounting bracket.
Dimensions	2-1/16 H x 1-7/8 W x 61/64 D in. (52 x 48 x 24 mm).

Accessories

Model No.	Wholesale Model No.	Description
K502	22-150	Optional mounting bracket.
N4-150	22-145	Adjustable restrictor.
N100-2501	21-153	28.8 scim restrictor.
N100-46	20-802	Adjustable restrictor.
N100-0010	21-038	Restrictor tee, polyethylene tubing.

Typical Applications

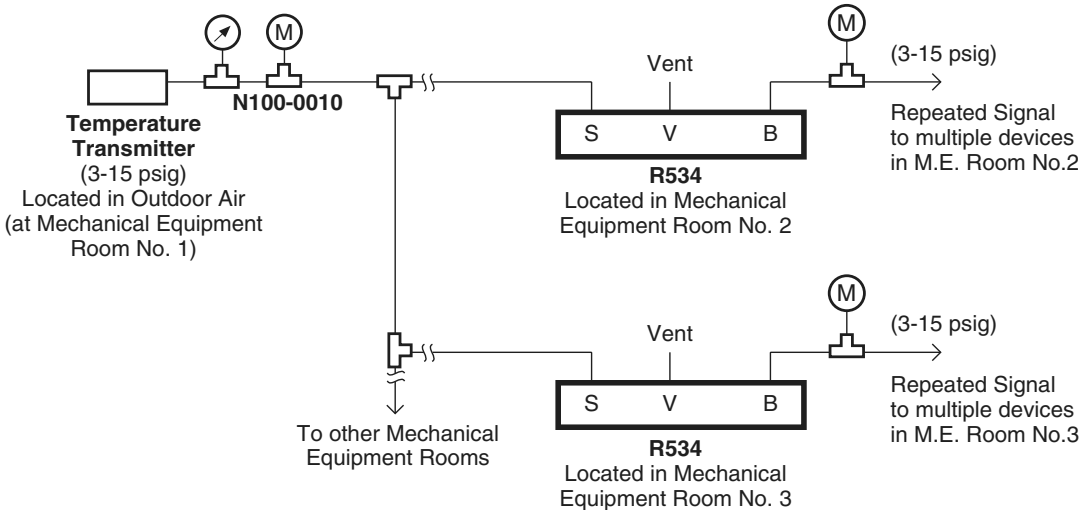

Figure 1 Typical Application.

TAC PNEUMODULAR® Summation Relay

The summation relay is a proportioning device for use in pneumatic control systems where the application requires the addition of two pneumatic signals. The branch line pressure increases in direct proportion to the sum of the two input signals and amplifies the volume of air available for the final control device, thereby minimizing system lag.

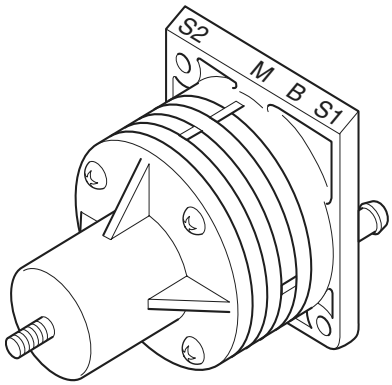

Features:

- Using S-1 and S-2 inputs, with main air on port M, the R537 operates as a summation (adding) relay; output is equal to the sum of the two inputs.
- May be used as a low pressure selector (with inputs to ports S-1 and M).
- May be used as 1:1 booster relay with adjustable bias.
- All ports clearly labeled. Ports align with MCS-S terminals.
- TAC PNEUMODULAR: Mounts on MCS-Socket or K502 Mounting Bracket.

Model Chart

Model No.	Wholesale Model No.	Port Connections	
		Port	Connected to
R537	2375-501[a]	M	Main air
		B	Branch output
		S_1	Input signal no. 1
		S_2	Input signal no. 2

[a] Includes plastic mounting strap and adhesive backed mounting plate.

Specifications

Action	Proportional.
Construction	Glass-filled nylon.
Maximum ambient temperature	140°F (60°C).
Supply air pressure	Clean, dry, oil free air required (Ref. EN-123).
Nominal	20 psig (138 kPa).
Maximum	30 psig (207 kPa).
Connections	Barbed fittings for 1/4 in. O.D. polyethylene or 5/32 in. I.D. polyurethane tubing.
Air consumption	28.8 scim (7.9 mL/s).
Air flow capacity	230.4 scim (62.9 mL/s).
Adjustments	Output biased ±10 psi.
Mounting	Designed for use on MCS-S manifold socket. This device can also be mounted by using the optional K502 mounting bracket.
Dimensions	2-1/16 H x 1-7/8 W x 2-33/64 D in. (52 x 48 x 64 mm).

Accessories

Model No.	Wholesale Model No.	Description
K502	22-150	Optional mounting bracket.
TOOL-082	—	5/64 in. hexhead wrench.

Typical Applications

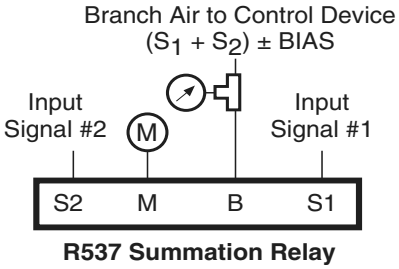

Figure 1 Typical Application.

TAC PNEUMODULAR® 2:1 Ratio Amplifying Relay

The amplifying relay is a proportioning device designed for use in pneumatic control systems where the application requires the amplification of a proportional signal from a controlling device. The relay's branch line pressure output increases as a 2:1 ratio to the input signal pressure (up to main air pressure) and amplifies the volume of air available to the final control device, thereby minimizing system lag.

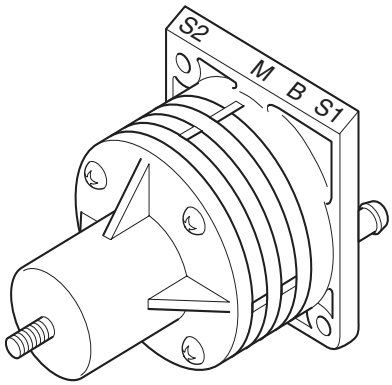

Features:

- 2:1 signal amplifying relay, with adjustable bias. Output changes are equal to input changes multiplied by two.
- Ideal for applications such as:
  - Operating two actuators, that have the same spring range, in sequence (using two R539s and their bias adjustments).
  - Narrowing the throttling range of any pneumatic controller (or portion of an operating sequence) by a factor of two.
  - Factory set for 10 psig branch pressure at 5 psig input pressure at port S1.
- All ports clearly labeled. Ports align with MCS-S terminals.
- TAC PNEUMODULAR: Mounts on MCS-Socket or K502 Mounting Bracket.

Model Chart

Model No.	Wholesale Model No.	Port Connections	
		Port	Connected to
R539	2378-501[a]	M	Main air
		B	Branch output
		S_1	Input signal

[a] Includes plastic mounting strap and adhesive backed mounting plate.

Specifications

Action	Proportional output at 2:1 ratio.
Construction	Glass-filled nylon.
Maximum ambient temperature	140°F (60°C).
Supply air pressure	Clean, dry, oil free air required (Ref. EN-123).
Nominal	20 psig (138 kPa).
Maximum	30 psig (207 kPa).
Connections	Barbed fittings for 1/4 in. O.D. polyethylene or 5/32 in. I.D. polyurethane tubing.
Air consumption	28.8 scim (7.9 mL/s).
Air flow capacity	230.4 scim (62.9 mL/s).
Adjustments	Bias can be manually adjusted from +5 to -13 psig by means of TOOL-082 (5/64 in. hexhead wrench).
Mounting	Designed for use on MCS-S manifold socket. This device can also be mounted by using the optional K502 mounting bracket.
Dimensions	2-1/16 H x 1-7/8 W x 2-33/64 D in. (52 x 48 x 64 mm).

Accessories

Model No.	Wholesale Model No.	Description
K502	22-150	Mounting bracket.
TOOL-082	—	5/64 in. hexhead wrench.

Typical Applications

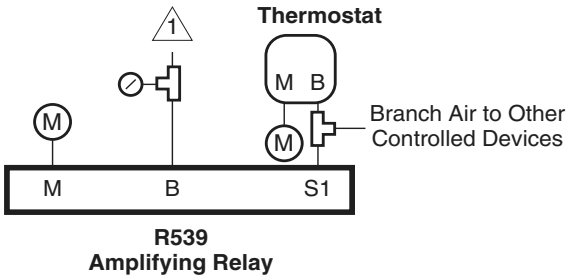

1 Branch (output) air to portion of control system requiring pressure changes at twice the rate of thermostat output pressure change.

Figure 1 Typical Application.

TAC PNEUMODULAR® Averaging Relay

The averaging relay is a proportional device designed for use in pneumatic control systems where the application requires operation of a final control device, or some other control action such as resetting a receiver controller, by the average of the signals from two pneumatic devices. The relay also amplifies the volume of air available to the control device, thereby minimizing system lag.

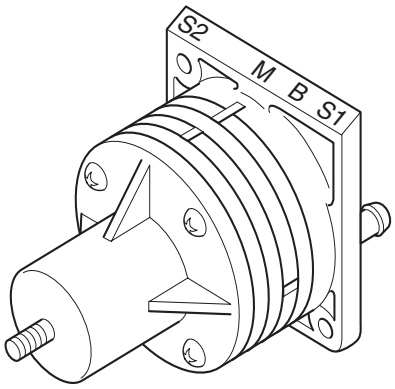

Features:

- Averaging relay (with adjustable bias, factory set to zero). Output equals the sum of the two inputs (S-1 and S-2), divided by two.
- Unlike some competitive bleed-type “averaging relays” (accurate only when the two inputs are equal, and whose accuracy decreases as the square of the signal difference), the R540 is a true averaging relay.
- All ports are clearly labeled. Ports align with MCS-S terminals.
- TAC PNEUMODULAR: Mounts on MCS-Socket or K503 Mounting Bracket.

Model Chart

Model No.	Wholesale Model No.	Port Connections	
		Port	Connected to
R540	2376-501[a]	M	Main air
		B	Branch output
		S_1	Input signal no. 1
		S_2	Input signal no. 2

[a] Includes plastic mounting strap and adhesive backed mounting plate.

Specifications

Action	Proportional.
Construction	Glass-filled nylon.
Maximum ambient temperature	140°F (60°C).
Supply air pressure	Clean, dry, oil free air required (Ref. EN-123).
Nominal	20 psig (138 kPa).
Maximum	30 psig (207 kPa).
Connections	Barbed fittings for 1/4 in. O.D. polyethylene or 5/32 in. I.D. polyurethane tubing.
Air consumption	28.8 scim (7.9 mL/s).
Air flow capacity	230.4 scim (62.9 mL/s).
Adjustments	Output may be advanced or retarded ±10 psig (69 kPa) by means of TOOL-082 (5/64 in. hexhead wrench).
Mounting	Designed for use on MCS-S manifold socket. This device can also be mounted by using the optional K502 mounting bracket.
Dimensions	2-1/16 H x 1-7/8 W x 2-33/64 D in. (52 x 48 x 64 mm).

Accessories

Model No.	Wholesale Model No.	Description
K502	22-150	Mounting bracket.
TOOL-082	—	5/64 in. hexhead wrench.

Typical Applications

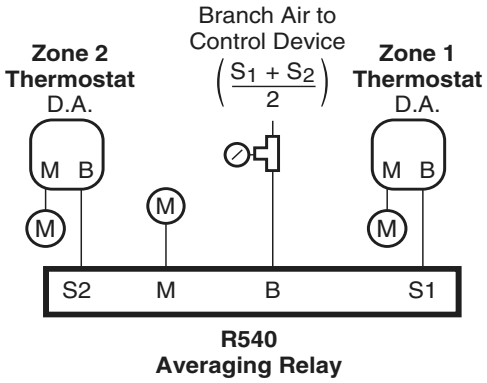

Figure 1 Typical Application.

Single/Dual Transmitter Input Receiver Controllers

For use in conjunction with remote proportional transmitters for proportional control of pneumatic actuated dampers, valves, etc., in air conditioning systems. The transmitter-receiver-controller system may be used to control temperature, humidity, or pressure.

Features:

- Nozzle and flapper relay-type receiver controllers.
- Linear, stable and responsive.
- Models available for one, two or three inputs.
- Mounting provided for two (1/8 NPT) 1-1/2 in. stem-mounted receiver-gauges and two 1-1/2 in. stem-mounted pressure gauges.
- Barbed fittings for 1/4 in O.D. plastic tubing.
- Setpoint scales available to match transmitter ranges.

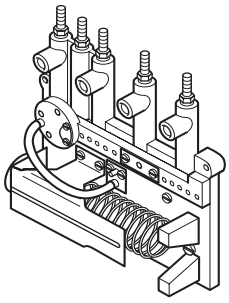

RKS-1001
(Shown without AKS-4 Cover)

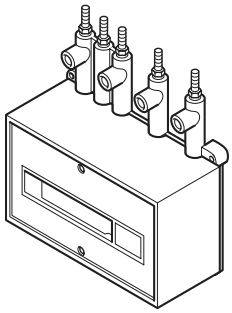

RKSR-4000

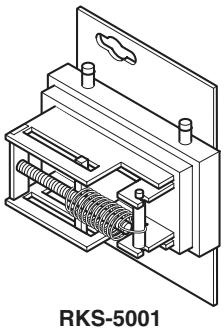

RKS-5001

Model Chart

Model No.	Description	Remote SPA	Action[a]	Type	Authority[b]	Proportional Band
RKS-5001	Single input	None	D.A./R.A.	One Pipe	None	4% to 40% of input transmitter span adjustable
RKS-1001				Two Pipe		2-1/2% to 40% of primary (input 1) transmitter span adjustable
RKS-2001		±10% of primary transmitter span				
RKS-3002	Dual input[c]	None			10% to 200% of primary (input 1) transmitter span adjustable	
RKS-4002		±10% of primary transmitter span				
RKSR-4000	Replacement single or dual input					

[a] D.A. (Direct Acting) factory shipped: increases output pressure on rise in input 1 pressure. Field changeable to R.A.
R.A. (Reverse Acting): decreases output pressure on rise in input 1 pressure.

[b] Primary transmitter connects to input 1.

[c] Input 2 has a reverse acting reset only. For direct acting the output pressure increases as input 2 increases. For reverse acting the output pressure increases as input 2 decreases.

Specifications

Receiver-controller	Forced balanced pneumatic amplifier.
Setpoint	Adjustable, °F, °C, in. water, mm water, % relative humidity labels (included with controller).
Proportional band	Field adjustable (refer to Model Chart).
Input signals	3 to 15 psig (21 to 103 kPa). Maximum input pressure 30 psig (207 kPa).
Output air signal	0.5 psig (3.4 kPa) to supply air pressure -0.5 psig (-3.4 kPa).
Action	Direct. Field changeable to reverse (refer to Model Chart).

Specifications (Continued)

Authority	
RKS-3002, -4002, RKSR-4000	Field adjustable (refer to Model Chart).
RKS-1001, -2001, -5001	None.
RKS-5001	Can be used as a 1:1 reverse acting relay to reverse a transmitter signal to obtain direct reset when used as a signal into input 2 of RKS-3002, RKS-4002, or RKSR-4000.
Ambient temperature limits	
Shipping and storage	-40 to 150°F (-40 to 65°C).
Operating	40 to 150°F (4 to 65°C).
Humidity	10 to 98% RH, non-condensing.
Supply air pressure	Clean, oil free, dry air required (reference EN-123).
Nominal	20 psig (138 kPa).
Minimum	18 psig (124 kPa).
Maximum	30 psig (207 kPa).
Air connections	
Tubing	Barb connectors for 1/4 in. O.D. plastic tubing.
Gauge ports	Integral for AKS-6000 Series gauges (except for the RKS-5001).
Air consumption for sizing air compressor	
RKS-1001, 2001, 3002, 4002, RKSR-4000	13.8 scim (3.8 mL/s) plus 41.5 scim (11.4 mL/s) for each transmitter and remote setpoint.
RKS-5001	41.5 scim (11.3 mL/s).
Air capacity for sizing air mains	
RKS-1001, 2001, 3002, 4002, RKSR-4000	16 scim (4.4 mL/s) plus 36 scim (13.2 mL/s) for each transmitter and remote setpoint.
RKS-5001	48 scim (13.1 mL/s).
Cover	Order separately, except RKSR-4000 factory supplied, refer to Accessories. Used when mounting receiver-controllers remote from cabinet or where susceptible to damage.
Mounting	Upright on surface of wall or panel.
Dimensions	
RKS-1001 through 4002, RKSR-4000	5-23/32 H x 7 W x 4 D in. (145 x 178 x 102 mm).
RKS-5001	4 H x 3-3/4 W x 2-1/2 D in. (102 x 95 x 64 mm).

Accessories

Model No.	Description
AD-8953	Vinyl mounting track for RKS-5001 only.
AKS-4	Cover for RKS-1001 through 4002 and RKSR-4000.
AKS-5	Cover for RKS-5001.
AKS-1100	Remote setpoint adjustors.
AL-362	Stem mounted back connected 0 to 30 psi gauge.
AT-532-098-1-1	0.0075 restrictor (white).
AT-532-098-1-2	.005" restrictor (Red).
AT-532-098-1-3	.010" restrictor (Blue).
AT-532-111-1-01	0.0075 tee restrictor for 5/32 in. plastic tubing.
AT-532-111-1-03	.010" tee restrictor 5/32" tubing
AT-539	Pilot pressure kit for RKS-1001 through 4002 and RKSR-4000.
H53-301	Room humidity transmitter.
HKS-8065	Enthalpy transmitter.
T53-101	Room temperature transmitter.
TOOL-095-1	Pneumatic calibration tool kit.

Typical Applications

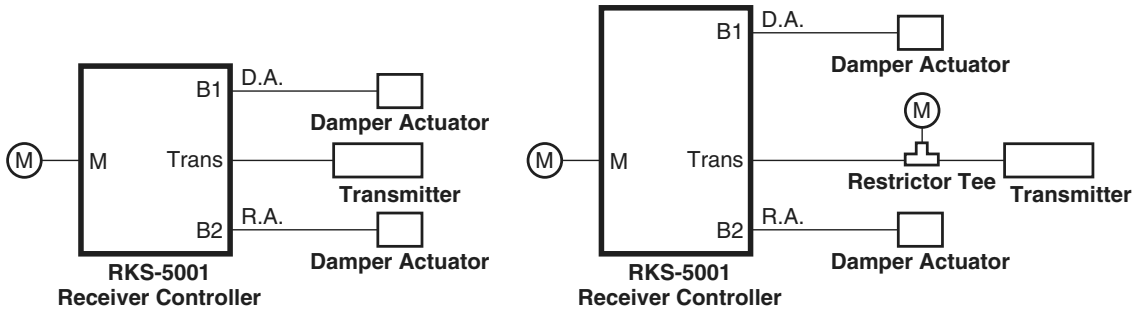

1 Only one output is available at a time.

Figure 1 Typical Piping for RKS-5001 Receiver-Controller.

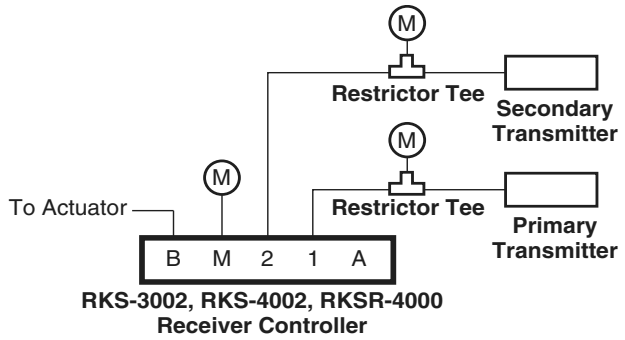

1 Shown with external restrictors for transmitters.

Figure 2 Typical Piping for RKS-3002, RKS-4002, RKSR-4000 Dual Input Receiver-Controller (External Restrictors for the Transmitters).

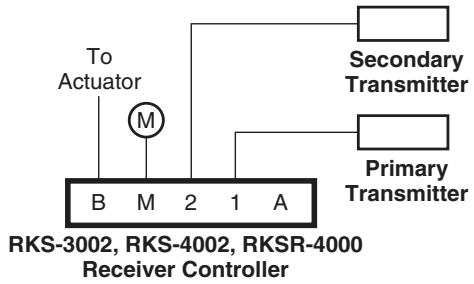

1 Shown using internal restrictors for transmitters of Receiver Controller.

Figure 3 Typical Piping for RKS-3002, RKS-4002, RKSR-4000 Dual Input Receiver-Controller (Internal Restrictors for the Transmitters).

NOTES: These apply to all RKS Series Receiver-Controllers:

1. When internal restrictors are used, the transmitter must be located within 200 ft. (61 m) of the receiver-controller.
2. When external restrictors are used, the transmitter must be located within 1000 ft. (305 m) of the receiver-controller, and the restrictor must be located within 200 ft. (61 m) of the transmitter (preferably at the transmitter's location). Remove internal restrictors from receiver-controller and install blocking gaskets.

TAC PNEUMODULAR® Gradual Switches

The S510 gradual switch is designed to allow manual setting of a desired pressure, up to main air pressure, where the application requires remote positioning of final control devices or remote control point adjustment of a pressure signal is desired.

The S511-5 and S-511-10 have been designed with an internal high pressure selector relay, primarily for use as a minimum position switch for damper operation when used with actuators having a 5 or 10 psig span, respectively.

Various dial plates are available for each model with specific switch applications.

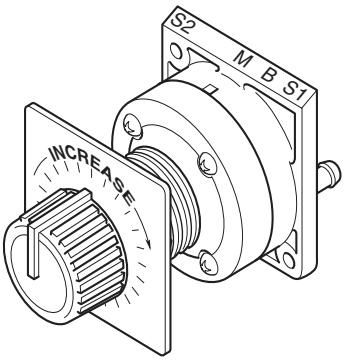

Typical S510 or S511

Features:

S510 and S511 Gradual and Minimum-Position Switches can easily be mounted any of three ways:

- Flush-mounted on panel face. Dial plate locks onto switch body and is held in place by tightening the mounting nut from the rear. Provides exposed adjustment.
- Mounted with two screws and MCS-G Gasket to MCS-S Socket. Provides concealed adjustment.
- Mounted remotely on the various mounting brackets listed. K511, K512 and K514 “flush-mount” the gradual switches with or without flush-mounted 2 in. pressure gauges.
- TAC PNEUMODULAR: All ports clearly labeled. Ports align with MCS-S terminals.

Model Chart

Model No.	Wholesale Model No.	Function	Comments	Active Connections	
				Port	Connected to
S510	2390-501	Gradual switch	0 to 20 psig output	M B	Main Branch
S511-5	2390-505	Minimum position switch	5 psig span output		
S511-10	2390-510	Minimum position switch	10 psig span output		

Specifications

Action	Proportional.
Construction	
Case	Glass-filled nylon.
Dial plates	Anodized aluminum.
Knob	Black sunburst plastic.
Maximum ambient temperature	140°F (60°C).
Supply air pressure	Clean, dry, oil free air required.
Nominal	20 to 25 psig (138 to 172 kPa).
Maximum	30 psig (207 kPa).

Specifications (Continued)

Connections	Barbed fittings for 1/4 in. O.D. polyethylene or 5/32 in. I.D. polyurethane tubing.
Air consumption	28.8 scim (7.9 mL/s).
Air capacity	230.4 scim (62.9 mL/s).
Mounting	Designed for use on MCS-S manifold socket. These devices can also be mounted on a panel face or surface mounted by using the appropriate mounting bracket (refer to Accessories).
Dimensions	
S510	2-1/16 H x 1-7/8 W x 3-1/4 D in. (52 x 48 x 83 mm).
S511-5, S511-10	2-1/16 H x 1-7/8 W x 3-1/2 D in. (52 x 48 x 89 mm).

Dial Plates for S510, S511-5, and S511-10

Model No.	Wholesale Model No.	Dial Markings
50-01	22-301	Warmer, arrow — clockwise.
50-02	22-302	Warmer, arrow — counterclockwise.
50-03	22-303	Increase, arrow — clockwise.
50-04	22-304	Increase, arrow — counterclockwise.
50-05	22-305	0 to 100.
50-06	22-306	Blank.
50-51	22-351	10 divisions.
50-53	22-353	0 to 20 psig.

Accessories

Model No.	Wholesale Model No.	Description
50-xx	—	Dial Plates (refer to Dial Plates for S510, S511-5, and S511-10 Table).
TOOL-082	—	5/64 in. hexhead wrench.
Mounting Brackets		
K511	22-155	Single switch bracket.
K512	22-156	One switch and one 2 in. gauge bracket.
K514	22-157	Two switches and two 2 in. gauge brackets.

Typical Applications

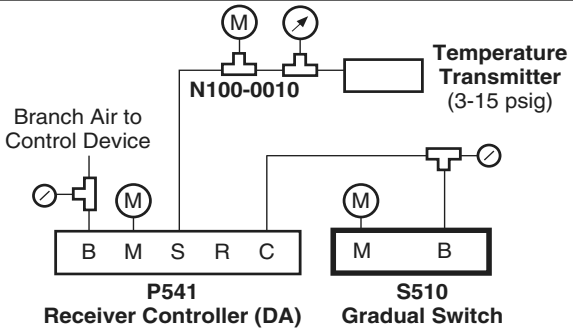

Figure 1 S510 Typical Application.

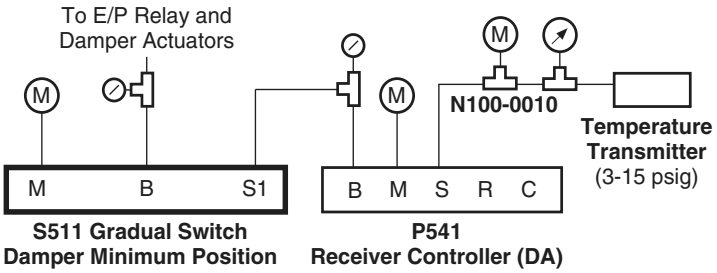

Figure 2 S511 Series Typical Application.

TAC PNEUMODULAR® Pressure Regulator

The S515 pressure regulator allows the manual setting of any desired air pressure, up to main pressure, where the application requires remote positioning of final control devices, remote control point adjustment of receiver controllers, or any other application where manual setting of an output pressure is desired.

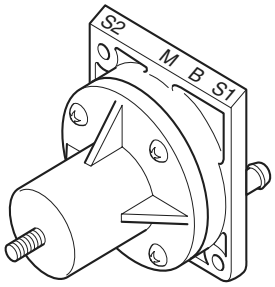

S515

Features:

- Pressure regulator allows any desired pressure (up to main air pressure) to be set with a 5/64 in. hex wrench.
- Mounts on MCS-S Socket or K502 Mounting Bracket.
- TAC PNEUMODULAR: All ports clearly labeled. Ports align with MCS-S terminals.

Model Chart

Model No.	Wholesale Model No.	Function	Comments	Active Connections	
				Port	Connected to
S515	2390-515	Pressure regulator	0 to main air pressure output	M	Main
				B	Branch

Specifications

Action	Proportional.
Construction	
Case	Glass-filled nylon.
Knob	Black sunburst plastic.
Maximum ambient temperature	140°F (60°C).
Supply air pressure	Clean, dry, oil free air required (Ref. EN-123).
Nominal	20 to 25 psig (138 to 172 kPa).
Maximum	30 psig (207 kPa).
Connections	Barbed fittings for 1/4 in. O.D. polyethylene or 5/32 in. I.D. polyurethane tubing.
Air consumption	28.8 scim (7.9 mL/s).
Air capacity	230.4 scim (62.9 mL/s).
Mounting	Designed for use on MCS-S manifold socket. These devices can also be mounted on a panel face or surface mounted by using the appropriate mounting bracket (refer to Accessories).
Dimensions	
S515	2-1/16 H x 1-7/8 W x 1-61/64 D in. (52 x 48 x 50 mm).

Accessories

Model No.	Wholesale Model No.	Description
N100-0010	—	Restrictor tee for copper and plastic tubing.
TOOL-082	—	5/64 in. hexhead wrench.
Mounting Bracket		
K502	22-150	Mounting bracket.

Typical Applications

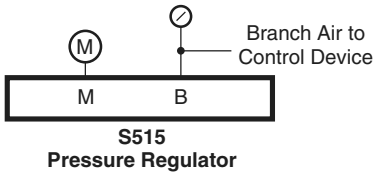

Figure 1 S515 Typical Application.

TAC PNEUMODULAR® Two-, Three-, Four-Position Selector Switches

These switches are manually operated devices adaptable to a wide variety of applications in pneumatic control systems. They are normally used to perform diverting or supply and exhaust functions to operate final control components or index relays in multiple switching systems.

The S520 is a two-position, four-branch switch. The S521 is a two-position five-branch switch that provides one blocked port in each knob position.

The S530 is a three-position, four-branch switch which can be used to supply a signal to any one of three devices or supply any one of three signals to a device. Its unused ports are blocked. The S531 is identical except for its unused ports being exhausted to atmosphere.

The S540 and S541 are four-position, five-branch switches which follow the same operating pattern as the S530 Series. However, they can supply a signal to any one of four devices or vice-versa. Unused ports are blocked in the S540 and exhausted in the S541.

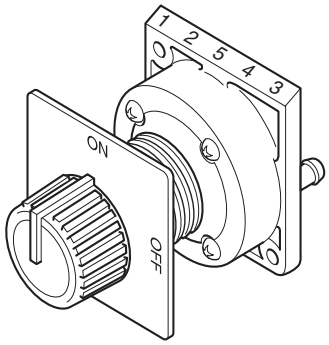

Features:

S520, S530, S540 Series Selector Switches can easily be mounted any of three ways:

- Flush-mounted on panel face. Dial plate locks onto switch body and is held in place by tightening the mounting nut from the rear. Provides exposed adjustment.
- Mounted with two screws and MCS-G Gasket to MCS-S Socket. Provides concealed adjustment.
- Mounted remotely on the various mounting brackets listed. K511, K512 and K514 “flush-mount” the gradual switches with or without flush-mounted 2 in. pressure gauges.
- TAC PNEUMODULAR: All parts clearly labeled. Ports align with MCS-S terminals.

Model Chart

Model No.	Wholesale Model No.	Description
S520	2392-504	Two-position, four-branch.
S521	2392-505	Two-position, five-branch (one blocked port in each knob position).
S530	2393-504	Three-position, four-branch (unused ports blocked).
S531	2393-505	Three-position, four-branch (unused ports exhausted).
S540	2394-504	Four-position, five-branch (unused ports blocked).
S541	2394-505	Four-position, five-branch (unused ports exhausted).

Dial Plates.

Model No.	Wholesale Model No.	Used with	Dial Markings			
50-06	22-306	S520 S521	Blank			
50-09	—		Occup.	Unoccup.	—	—
	22-311		Min.	Max.	—	—
50-13	22-313		Winter	Summer	—	—
50-14	22-314		Manual	Auto	—	—
50-15	22-315		Auto	Off	—	—
50-16	22-316		On	Auto	—	—
50-17	22-317		On	Off	—	—
50-18	—		Closed	Auto	—	—
50-19	22-319		Open	Auto	—	—
50-20	22-320		Open	Closed	—	—
50-23	—		Day	Night	—	—
50-24	22-324		1	2	—	—
50-52	22-352		1	2	—	—
50-06	22-306	S530 S531	Blank			
50-32	22-332		1	2	3	—
50-37	22-337		Open	Auto	Closed	—
50-38	22-338		Heat		Cool	—
50-39	22-339		Day		Night	—
50-45	22-345		Winter		Summer	—
50-46	22-346		Occup.		Unoccup.	—
50-47	22-347		On		Off	—
50-06	22-306	S540 S541	Blank			
50-48	—		2	3	4	1
50-49	—		Heat	Vent	Cool	Auto

Specifications

Construction	
Case	Glass-filled nylon.
Dial plates	Anodized aluminum.
Knob	Black sunburst plastic with pointer.
Maximum ambient temperature	140°F (60°C).
Supply air pressure	Clean, dry, oil free air required (Ref. EN-123).
Maximum	30 psig (207 kPa).
Connections	Barbed fittings for 1/4 in. O.D. polyethylene or 5/32 in. I.D. polyurethane tubing.
Air consumption	None.
Air flow capacity	1,152 scim (314.5 mL/s).
Adjustments	Knob.
Mounting	Designed for use on MCS-S manifold socket. These devices can also be mounted on a panel face or surface mounted by using the appropriate mounting bracket (refer to Accessories).
Dimensions	2-1/16 H x 1-7/8 W x 2-7/8 D in. (52 x 48 x 73 mm).

Accessories

Model No.	Wholesale Model No.	Description
50-xx	22-3xx	Dial Plates (refer to Dial Plates Table).
Mounting Bracket Accessories		
K511	22-155	Single switch bracket.
K512	22-156	One switch and one gauge per bracket.
K514	22-157	Two switches and two gauges per bracket.

Typical Applications

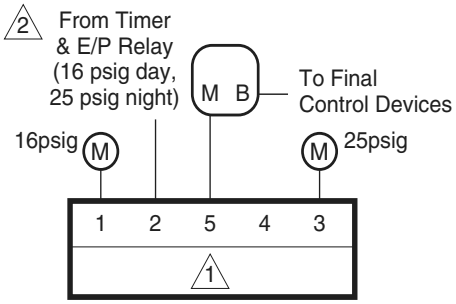

1 Selector Switch with Day-Auto-Night Dial

Switch Position	Ports Connected	Thermostat Supply Pressure	
		Day	Night
1	1 & 5	16 psig	–
2	2 & 5	16 psig 2	25 psig 2
3	3 & 5	–	25 psig

2 Supplied from an E/P relay controlled by a programmed timer.

Figure 1 Automatic or Manual Changeover of Day/Night System.

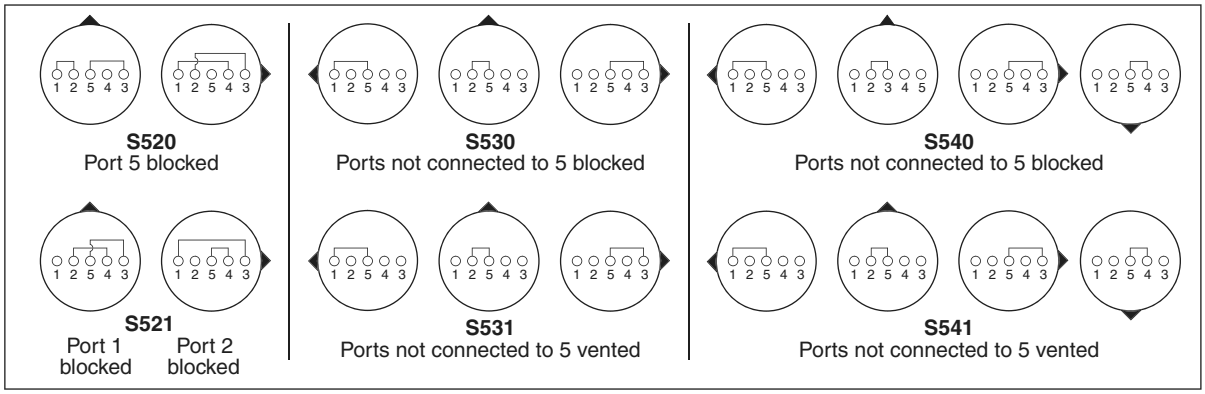

Figure 2 Internal Port Connections.

Room Thermostats

These pneumatic room thermostats are designed for proportional temperature control of pneumatic valves and damper actuators to maintain room air temperatures in heating, ventilating, and air conditioning systems.

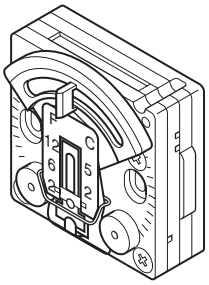

Features:

- Small size, approximately 2 x 2 in. (51 x 51 mm).
- Attractive appearance (various metal or ABS plastic covers available).
- Factory calibrated. S.S. ball-in-seat provides pneumatic feedback for linear, stable operation.
- Easy-to-use throttling range adjustment and recalibration.
- Adjustable (patented) bimetal shows actual throttling range in both °F and °C. Adjustable 2 to 12°F (1 to 6.7°C).
- Setpoint (in both °F and °C) shown on thermostat body with cover removed.
- Leakproof, O-ring sealed, spring-loaded self-closing branch gauge tap.
- T23, T24, T27, 2214, and 2216 only:
  - Separate factory-calibrated night bimetal and setpoint dial, with fixed 4°F night throttling range for accurate “night” operation.
  - Snap-acting (not gradual) changeover from “day” to “night” operation and vice versa.
- T27 and 2216 only:
  - Third port (R) output with manual reset lever allows full restoration of day operation (typically, of unit ventilator), with either manual or automatic reset to day-night schedule.
- T32, T33, and 2218 only:
  - Snap-acting (not gradual) changeover from direct-action to reverse-action and vice versa.

Model Chart

Model No. [a]	Wholesale Model No. [b]	Model No. [a]	Wholesale Model No. [b]	Dial Range °F (°C)	Air Consumption	Description (Refer to Following Pages for More Detail)
W/O Dial Limit Stops		With Dial Limit Stops				
T12-301	2211-012 2211-411 [c]	T12-3011 T12-3081 [c]	2211-112 2211-512 [c]	55 to 85 (13 to 29)	0.017 scfm at 20 psig (0.48 L/m at 138 kPa)	Single temperature, one-pipe, D.A. T12-3011 same as T12-301, but has factory-installed 10-59 setpoints stops.
T13-301	2211-013 2211-412 [c]	T13-3011 T13-3081 [c]	2211-113 2211-513 [c]			Single temperature, one-pipe, R.A. T13-3011 same as T13-301, but has factory-installed 10-59 setpoint stops.

Model Chart (Continued)

Model No.[a]	Wholesale Model No.[b]	Model No. [a]	Wholesale Model No. [b]	Dial Range °F (°C)	Air Consumption	Description (Refer to Following Pages for More Detail)
W/O Dial Limit Stops		With Dial Limit Stops				
T18-301	2212-118 2212-418 [c]	T18-3011 T18-3081[c] T18-3091 [c]	2212-128 2212-518 [c]	55 to 85 (13 to 39)	15.6 scim at 20 psig (4.2 mL/s at 138 kPa)	Single temperature, two-pipe, D.A., throttling range adjustable 2° to 12°. T18-3011 same as T18-301, but has factory-installed 10-59 setpoint stops.
T18-305	2212-301	—	—	35 to 65 (2 to 18)		
T18-306	2212-302	—	—	75 to 105 (24 to 41)		
T19-301	2212-119 2212-419 [c]	T19-3011 T19-3081 [c] T19-3091 [c]	2212-129 2212-519 [c]	55 to 85 (13 to 39)		Single temperature, two-pipe, R.A., throttling range adjustable 2° to 12°. T19-3011 same as T19-301, but has factory-installed 10-59 setpoint stops.
T19-305		—	—	35 to 65 (2 to 18)		
T19-306	2212-304	—	—	75 to 105 (24 to 41)		
T23-301	2214-121	T23-3011	2214-131 2214-521 [c]	Day 55 to 85 (13 to 39)	29.4 scim at 16 psig (8.0 mL/s at 110 kPa)	Day-Night Thermostat, two-pipe, D.A. 16 psig day, 25 psig night. T23-3011 same as T23-301, but has factory-installed 10-59 setpoint stops.
				Night 50 to 80 (10 to 27)	43.2 scim at 25 psig (11.8 mL/s at 172 kPa)	
T24-301	2214-122	T24-3011	2214-132 2214-522 [c]	Day 55 to 85 (13 to 39)	29.4 scim at 16 psig (8.0 mL/s at 110 kPa)	Day-Night Thermostat, two-pipe, R.A. 16 psig day, 25 psig night. T24-3011 same as T24-301, but has factory-installed 10-59 setpoint stops.
				Night 50 to 80 (10 to 27)	43.2 scim at 25 psig (11.8 mL/s at 172 Kpa)	
T27-301	2216-126	T27-3011	2216-136 2216-526 [c]	Day 55 to 85 (13 to 39)	29.4 scim at 16 psig (8.0 mL/s at 110 kPa)	Day-Night Thermostat, three-pipe, with manual reset lever D.A. 16 psig day, D.A. 25 psig night. T27-3011 same as T27-301, but has factory-installed 10-59 setpoint stops.
				Night 50 to 80 (10 to 27)	43.2 scim at 25 psig (11.8 mL/s at 172 Kpa)	

Model Chart (Continued)

Model No. [a]	Wholesale Model No. [b]	Model No. [a]	Wholesale Model No. [b]	Dial Range °F (°C)	Air Consumption	Description (Refer to Following Pages for More Detail)
W/O Dial Limit Stops		With Dial Limit Stops				
T32-301	2218-132	T32-3011	2218-142 2218-532 [c]	55 to 85 (13 to 39)	31.1 scim at 16 psig (8.5 mL/s at 110 kPa)	Summer-Winter, throttling range adjustable 2° to 12°. 16 psig Main — R.A., Summer. 25 psig Main — D.A., Winter. (Can be used with 8 psig summer main if recalibrated in the field.) T32-3011 same as T32-301 but has factory-installed 10-59 setpoint stops.
					43.2 scim at 25 psig (11.8 mL/s at 172 Kpa)	
T32-321	2218-134	—	—		22.5 scim at 13 psig (6.1 mL/s at 90 kPa)	Summer-Winter Thermostat for use with Honeywell 13 to 18 psig Systems. 13 psig Main — R.A., Summer. 18 psig Main — D.A., Winter.
					34.5 scim at 18 psig (9.4 mL/s at 124 kPa)	
T33-301	2218-133	—	—		29.4 scim at 15 psig (8 mL/s at 103 kPa)	Summer-Winter Thermostat for use with Johnson main air systems. 25 psig Main — R.A., Summer. 16 psig Main — D.A., Winter.
					34.5 scim at 20 psig (9.4 mL/s at 138 Kpa)	

[a] All thermostats include: Two mounting screws.

[b] All wholesale thermostats include: One or two 1/4 x 3/16 in. tubing reducer(s), 20-693 tubing, 20-714 wall plate, 20-711 mounting plate, and two mounting screws.

[c] This is a thermostat kit; refer to Kit Model Chart on page 122.

Cover Options

Thermostat covers are available in various styles to meet particular requirements. Cover options include models with setpoint scale and thermometer, setpoint scale only, thermometer only, or blank. An external setpoint adjustment cover is available with all models and can be field installed on covers where required.

Covers must be ordered separately, refer to Cover Selection Table on page 25.

T-Series Thermostat Kits

Kit Model Chart

Part Number	Parts	Description
T1x-3081	T1x-3011	Thermostat with factory installed dial stop
	10-11	Tubing assembly
	10-58	Mounting ring
	10-77	Adaptor plate
	B-262 (was N4-109)	1/4 x 3/16 in. reducer
	C3-46	Cover kit
T1x-3091	T1x-3011	Thermostat with factory installed dial stop
	RC-3-181	Cover insert
	C3-42	Cover
	N5-95	Thermostat conversion kit
2211-41x 2212-41x	221x-41x	Thermostat
	20-714	Wall plate
	20-042	Mounting plate and screws
	20-693	Tubing
	2890-011	Convertible cover
2211-51x 2212-51x 2214-52x 2216-526 2218-53x	221x-5xx	Thermostat with factory installed dial stop
	21-933	Full dial cover with blank cover conversion
	22-022	Conversion kit

Specifications	
Action	Proportional; refer to Model Chart.
Setpoint range	55 to 85°F (13 to 29°C).
Throttling range	2 to 12°F/12 psi (-17 to-11°C/83 kPa) adjustable, factory set 3°F (-16 °C)(night, 3 to 5°F/12 psi (-16 to -15°C/83 kPa), non-adjustable).
Construction	
Components	Die cast aluminum, stainless steel, and glass-filled nylon.
Diaphragms	Fabric-reinforced neoprene.
Air filter	Internal.
Supply air pressure	Clean, dry, oil free air required (Refer to EN-123).
Nominal	Refer to Model Chart and Typical Applications.
Maximum	30 psig (207 kPa).
Connections	For spring-reinforced 3/16 in. plastic tubing and required fittings. Order separately.
Air consumption	Refer to Model Chart and Typical Applications.
Calibration point	9 psig branch line pressure when ambient temperature equals setpoint (except T32 Series and T33-301, 12 psig branch line pressure).
Setpoint adjustment	Serrated thumbwheel, external or concealed.
Mounting	Upright position on wall.
Dimensions	2-1/32 H x 2-1/32 W x 1-3/8 D in. (52 x 52 x 35 mm).

Accessories

Model No.	Wholesale Model No.	Description
6-371	20-642	Mounting ring (use with mounting heads).
10-11	20-693	Tubing assembly.
10-15	20-695	Aspirating box, two pipe.
10-53	20-707	Metal thermostat guard.
10-57	20-710	Mortar joint fitting, two tube, copper.
10-58	20-711	Mounting ring (use with N5-52).
10-59	20-712	Internal stop kit.
10-62	20-715	Thermostat guard, clear Lexan® (except T27 Series).
10-63	20-716	Insulating backplate, for plastic guards.
10-64	—	Tubing assembly with eyelets and fittings.
10-66	21-468	Mortar joint fitting, two “FR” tubes.
10-72	21-800	Concealed adjustment cover (black), for metal covers.
10-73	21-473	Drywall mounting fitting (snap-in).
10-76	21-876	Thermostat guard, opaque ABS (except T27 Series).
10-77	20-714	Adaptor plate.
10-78	—	Insulating backplate.
10-80	—	Concealed adjustment cover for use with gray ABS cover.
10-81	—	Concealed adjustment cover, for use with beige ABS cover.
10-82	—	Mounting plate for 2 x 4 switch box, black.
10-82-SS	—	Stainless steel mounting plate.
10-82-47	—	Beige mounting plate.
10-82-48	—	Euro-white mounting plate.
MCS-GA	22-138	Gauge tap adaptor.
N2-4	20-881	Calibration tool for thermostats, (and P341, P541 and P541-RA).
N5-49	21-065	Adaptor (for use with N5-53).
N5-52	21-068	Bracket, drywall mount (use with 10-58 mounting ring).
N5-53	21-069	Bracket, stud mount rough-in.
N5-95	22-022	Wall thermostat, conversion kit.
N100-0010	21-038	0.017 scfm restrictor tee, red plastic.
N100-2501	21-153	In-line 0.017 scfm restrictor, red plastic.
—	20-850	Thermostat mounting plate.
—	22-022	Thermostat conversion kit.
—	900-002	Thermostat calibration kit.

See Thermostat Covers section starting on page 25.
For additional information, refer to Accessories page 157

Typical Applications

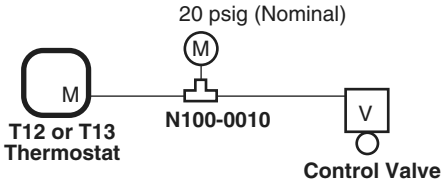

Figure 1 T12 or T13 Typical Application.

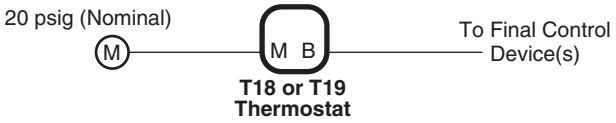

Figure 2 T18 or T19 Typical Application.

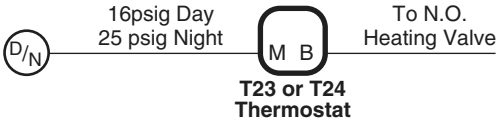

Figure 3 T23 or T24 Typical Application.

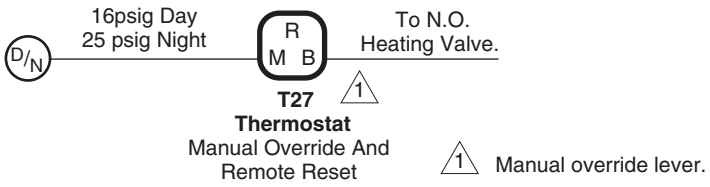

Figure 4 T27 Typical Two Pipe Application.

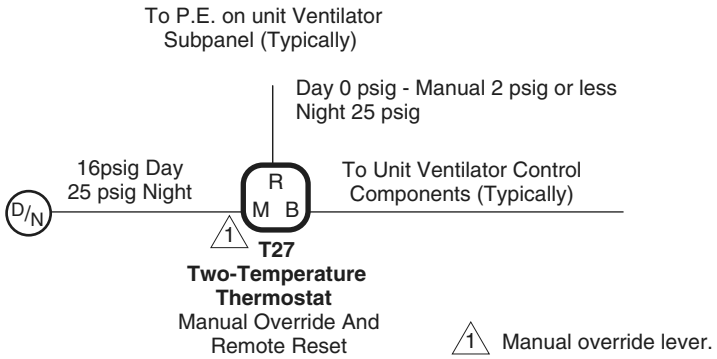

Figure 5 T27 Typical Three Pipe Application.

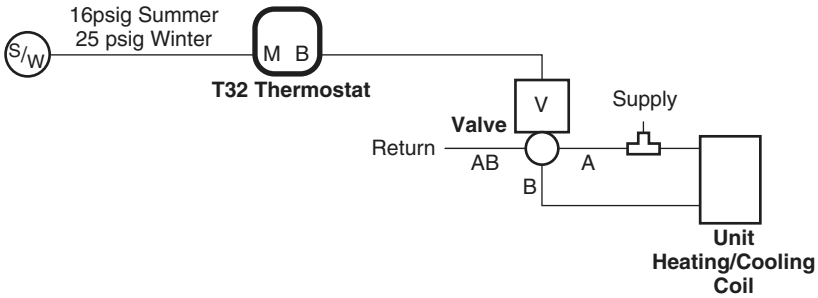

Figure 6 T32 Typical Application.

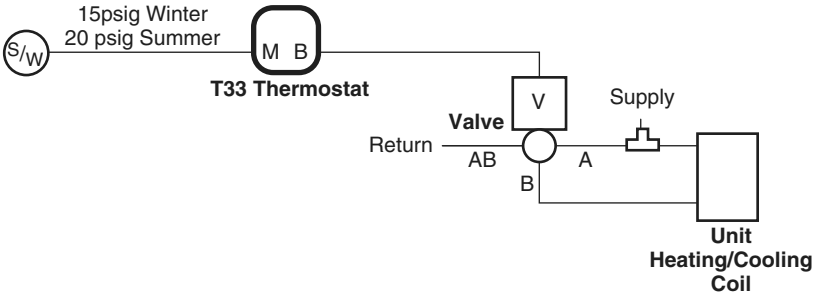

Figure 7 T33 Typical Application.

Energy Conservation Summer-Winter Room Thermostat

This pneumatic room thermostat is designed for proportional control of pneumatic valves and damper actuators in environmental control systems where a dual pressure air main is utilized for seasonal changeover of heating and cooling functions. Its design incorporates a highly sensitive, bimetal, thermostatic element and a pilot operated relay with pneumatic feedback for accuracy and stability over the entire operating range.

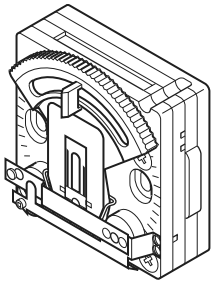

Features:

- Small size: Approximately 2 x 2 in. (51 x 51 mm).
- Attractive appearance (various metal or ABS plastic covers available).
- Factory calibrated. S.S ball-in-seat provides pneumatic feedback for linear, stable operation.
- Leakproof, O-Ring sealed, spring-loaded self-closing branch gauge tap.
- Separate bimetals (and setpoint scales) for heating and cooling.
- Limited setpoint ranges for energy conservation: 44 to 74°F (7 to 23°C) for winter (heating) and 76 to 85°F (24.5 to 29.5°C) for summer (cooling).
- Snap-acting (not gradual) changeover from direct action to reverse action, and vice versa.

Model Chart

Model No.	Wholesale Model No.	Parts	Description
T34-3011[a]	2218-301[b]	—	Refer to Specifications.
—	2218-534[c]	2218-301	Thermostat
		21-933	Full dial cover with blank cover conversion
		22-022	Conversion kit

[a] All thermostats include: Two mounting screws.

[b] All Wholesale thermostats include: One or two 1/4 x 3/16 i n. tubing reducer(s), 20-693 tubing, 20-714 wall plate, 20-711 mounting plate, and two mounting screws.

[c] For details refer to Table , “T-Series Thermostat Kits,” on page 122.

Cover Options

Thermostat covers are available separately in various styles to meet particular requirements. Cover options include models with setpoint scale and thermometer, setpoint scale only, thermometer only or blank (suggest using blank cover). An external setpoint adjustment cover is available with all models and can be field installed on covers where required.

Covers must be ordered separately, refer to Cover Selection Table on page 25.

T34-3011 (2218-301, 2218-534 Kit)

Specifications

Action	Proportional: R.A. at 15 psig (103 kPa) , D.A at 20 psig (138 kPa).
Setpoint range	44 to 74°F (7 to 23°C) winter (internal); 76 to 85°F(24 to 29°C) summer (adjustable by thumbwheel); factory installed dial stops.
Throttling range	4°F (-16°C) fixed.
Construction	
Components	Die cast aluminum, stainless steel and glass-filled nylon.
Diaphragms	Fabric-reinforced neoprene.
Air filter	Internal.
Supply air pressure	Clean, dry, oil free air required (Refer to EN-123).
Summer	16 psig (110 kPa).
Winter	25 psig (172 kPa).
Connections	For spring-reinforced 3/16 in. plastic tubing and required fittings (order separately).
Air consumption	34.6 scim at 16 psig (9.4 mL/s at 110 kPa); 51 scim at 25 psig (14.2 mL/s at 172 kPa).
Calibration point	9 psig (62 kPa) branch line pressure.
Cover options	See CT-x1, CTR-x1 for cover options (order separately).
Setpoint adjustment	Serrated thumbwheel, external or concealed.
Mounting	Upright position on wall.
Dimensions	2-1/32 H x 2-1/32 W x 1-3/8 D in. (52 x 52 x 35 mm).

For additional information, refer to Accessories page 636.

Accessories

Model No.	Wholesale Model No.	Description
6-371	20-642	Mounting ring (use with mounting heads).
10-15	20-695	Aspirating box, two pipe.
10-53	20-707	Metal thermostat guard.
10-57	20-710	Mortar joint fitting, two tube, copper.
10-58	20-711	Mounting ring (use with N5-52).
10-59	20-712	Internal stop kit.
10-62	20-715	Thermostat guard, clear Lexan®.
10-63	20-716	Insulating backplate, for plastic guards.
10-64	—	Tubing assembly with eyelets and fittings.
10-66	21-468	Mortar joint fitting, with two"FR" tubes.
10-72	21-800	Concealed adjustment cover (black), for metal covers.
10-73	21-473	Drywall mounting fitting (snap-in).
10-76	21-876	Opaque plastic guard.
10-77	20-714	Adaptor plate.
10-78	—	Insulating backplate.
10-80	21-964	Concealed adjustment cover for use with gray ABS cover.
10-81		Concealed adjuistment cover, for use with beige ABS cover.
10-82	20-850	Mounting plate for 2 x 4 switch box, Black.
10-82-SS	—	Stainless steel.
10-82-47	—	Beige.
10-82-48	—	Euro-white.
MCS-GA	22-138	Gauge tap adaptor.
N2-4	20-881	Calibration tool for thermostats (and P341, P541, and P541-RA).
N5-49	21-065	Adaptor (for use with N5-53).
N5-52	21-068	Bracket, drywall mount. (Use with 10-58 mounting ring).
N5-53	21-069	Bracket, stud mount rough-in.
N5-95	22-022	Wall thermostat conversion kit.

See Thermostat Covers section starting on page 25
For additional information, refer to Accessories page 157

Typical Applications

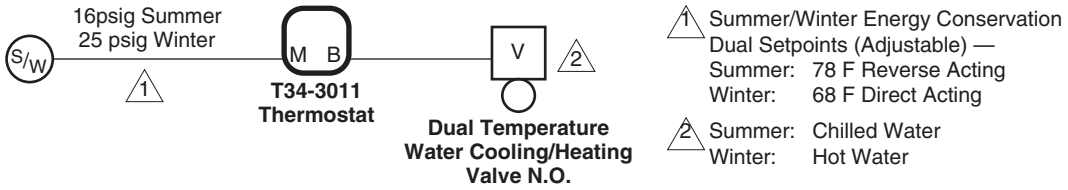

Figure 1 Typical Application.

Dual Setpoint/Deadband Room Thermostat

The dual setpoint/deadband pneumatic room thermostats are designed for the proportional control of pneumatic valves, damper actuators, and other final control devices in environmental control systems. These devices are for use when it is desirable to set up a temperature span within which the HVAC system uses no energy for heating or cooling between selected heating and cooling setpoints. The high capacity, two pipe, pilot-operated relay type design provides pneumatic feedback for accuracy and stability over the entire operating range.

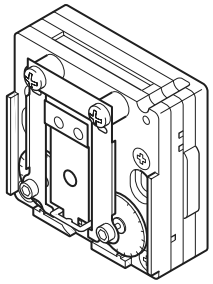

Features:

- Attractive appearance (various metal or ABS plastic covers available).
- Factory calibrated. S.S. ball-in-seat provides pneumatic feedback for linear, stable operation.
- Deadband is set merely by setting desired heating and cooling setpoints.
- Deadband output pressure factory set at 8 psig; field adjustable.
- Leakproof, O-Ring-sealed, spring-loaded self-closing branch gauge tap.

Model Chart

Model No.[a]	Wholesale Model No.[b]	Parts	Description
T35-301	2212-318	—	Refer to Specifications.
T36-301	2212-319		
—	2212-538[c]	2212-318	Thermostat
		21-928	Blank cover
		22-022	Conversion kit
—	2212-539[c]	2212-319	Thermostat
		21-928	Blank cover
		22-022	Conversion kit

[a] All thermostats include: Two mounting screws.

[b] All wholesale thermostats include: One or two 1/4 x 3/16 in. tubing reducer(s), 20-693 tubing, 20-714 wall-plate, 20-711 mounting plate, and two mounting screws.

[c] This is a Thermostat Kit; refer to Table , “T-Series Thermostat Kits,” on page 122.

Specifications

Action	Proportional, with deadband.
T35-301	Direct.
T36-301	Reverse.
Setpoint range	
Heating	57 to 75°F (14 to 24°C).
Cooling	65 to 83°F (18 to 28°C).
Throttling range	1.5°/5 psi non-adjustable for each setpoint (approximately).

Specifications (Continued)

Construction	
Components	Die cast aluminum, stainless steel, and glass-filled nylon.
Diaphragms	Fabric-reinforced neoprene.
Air filter	Internal.
Supply air pressure	Clean, dry, oil free air required (Refer to EN-123).
Operating	20 psig (138 kPa).
Maximum	30 psig (207 kPa).
Connections	For spring-reinforced 3/16 in. plastic tubing and required fittings (order separately).
Air consumption	29.4 scim at 20 psig (8.0 mL/s at 172 kPa) main air pressure.
Calibration point	
Deadband output	Factory set at 8 psig (adjustable).
Direct acting T35-301	Heating: 4 psig (28 kPa) at setpoint. Cooling: 10.5 psig (72 kPa) at setpoint.
Reverse acting T36-301	Cooling: 4 psig (28 kPa) at setpoint. Heating: 10.5 psig (72 kPa) at setpoint.
Cover options	See CT-x1, CTR-x1 for cover options (order separately).
Setpoint adjustment	Individual concealed adjustments or heating and cooling by means o N2-4 calibration tool.
Mounting	Upright position on wall.
Dimensions	2-1/32 H x 2-1/32 W x 1-3/8 D in. (52 x 52 x 35 mm).

For additional information, refer to Accessories page 636.

Accessories

Model No.	Wholesale Model No.	Description
6-371	20-642	Mounting ring (use with mounting heads).
10-15	20-695	Aspirating box, two pipe.
10-53	20-707	Metal thermostat guard.
10-57	20-710	Mortar joint fitting, two tube, copper.
10-58	20-711	Mounting ring (use with N5-52).
10-59	20-712	Internal stop kit.
10-62	20-715	Thermostat guard, clear Lexan®.
10-63	20-716	Insulating backplate, for plastic guards.
10-64	—	Tubing assembly with eyelets and fittings.
10-66	21-468	Mortar joint fitting, two “FR” tubes.
10-72	21-800	Concealed adjustment cover (black), for metal covers.
10-73	21-473	Drywall mounting fitting (snap-in).
10-76	21-876	Thermostat guard, opaque ABS.
10-77	20-714	Adaptor plate.
10-78	—	Insulating backplate.
10-80	—	Concealed adjustment cover, for use with gray ABS cover.
10-81	—	Concealed adjustment cover, for use with beige ABS cover.
10-82	20-850	Mounting plate for 2 x 4 switch box, Black.
10-82-SS	—	Stainless steel.
10-82-47	—	Beige.
10-82-48	—	Euro-white.
MCS-GA	22-138	Gauge tap adaptor.
N2-4	20-881	Calibration tool for thermostats, (and P341, P541 and P541-RA).
N5-49	21-065	Adaptor (for use with N5-53).
N5-52	21-068	Bracket, drywall mount (use with 10-58 mounting ring).
N5-53	21-069	Bracket, stud mount rough-in.
N5-95	—	Wall thermostat conversion kit.
—	22-022	Thermostat conversion kit.
—	900-002	Thermostat calibration kit.

See Thermostat Covers section starting on page page 25.
For additional information, refer to Accessories page 157

Typical Applications

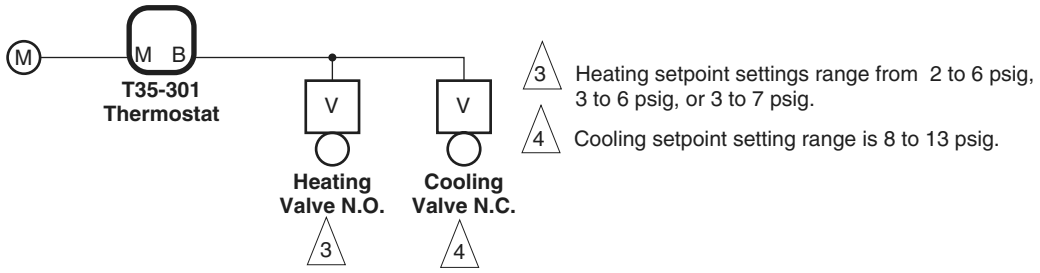

Figure 1 Typical Application.

Room Temperature Transmitter

The temperature transmitter measures room temperature and transmits a proportional pneumatic signal to a calibrated receiver gauge and/or receiver controller. The device is factory set to transmit a 3 to 15 psig signal over a 50 to 90° range.

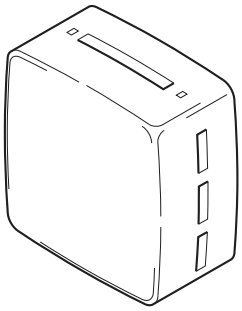

Features:

- Permits remote readout and control of room temperature.
- Highly sensitive bimetal sensing element.
- Linear response to room temperature changes.
- Small size, attractive appearance.
- Matches appearance of T-Series 2 x 2 in. Thermostats, H18-301 Humidistat, and H53-301 R.H. Transmitter.
- Field-adjustable “zero” adjustment.

Model Chart

Model No.[a]	Wholesale Model No.[a]	Description
T53-101	2220-053[b]	Refer to Specifications.

[a] Order cover separately (C2-4x recommended).

[b] Includes wall plate, (1) 1/4” x 3/16” reducer, 6” piece of plastic tubing, and mounting plate.

Specifications

Action	Direct acting, proportional.
Temperature Range	50 to 90°F (10 to 32°C), fixed.
Construction	
Components	Die cast aluminum, stainless steel, and glass-filled nylon.
Diaphragms	Fabric-reinforced neoprene.
Air filter	Internal.
Supply air pressure	Clean, dry, oil free air required (Ref. EN-123).
Nominal	20 ±0.5 psig (138 kPa).
Maximum	30 psig (207 kPa).
Connections	For spring-reinforced 3/16 in. plastic tubing and required fittings (order separately).
Calibration point	Refer to Figure 1.
Mounting	Upright position on wall.
Dimensions	2-1/32 H x 2-1/32 W x 1-3/8 D in. (52 x 52 x 35 mm).

Accessories

Model No.	Wholesale Model No.	Description
6-371	20-642	Mounting ring (use with mounting heads).
10-53	20-707	Metal thermostat guard.
10-57	20-710	Mortar joint fitting, two tube, copper.
10-58	—	Mounting ring (use with N5-52).
10-62	20-715	Thermostat guard, clear Lexan® (except T27 Series).
10-63	20-716	Insulating backplate, for plastic guards.
10-64	—	Tubing assembly with eyelets and fittings.
10-66	21-468	Mortar joint fitting, two “FR” tubes.
10-73	21-473	Drywall mounting fitting (snap-in).
10-76	21-876	Thermostat guard, opaque ABS (except T27 Series).
10-77	20-714	Adaptor plate.
10-78	—	Insulating backplate.
10-80	—	Concealed adjustment cover, for use with gray ABS cover.
10-82	—	Mounting plate for 2 x 4 switch box, black.
10-82-SS	—	Stainless steel.
10-82-47	—	Beige.
10-82-48	—	Euro-white.
MCS-GA	22-138	Gauge tap adaptor.
N2-4	20-881	Calibration tool for thermostats, (and P341, P541 and P541-RA).
N5-49	21-065	Adaptor (for use with N5-53).
N5-52	21-068	Bracket, drywall mount (use with 10-58 mounting ring).
N5-53	21-069	Bracket, stud mount rough-in.
N100-0010	21-038	0.017 scfm restrictor tee, red plastic (required).
N100-2501	21-153	In-line 0.017 scfm restrictor, red plastic.
N4-32	20-944	Restrictor tee, copper tubing

Typical Applications

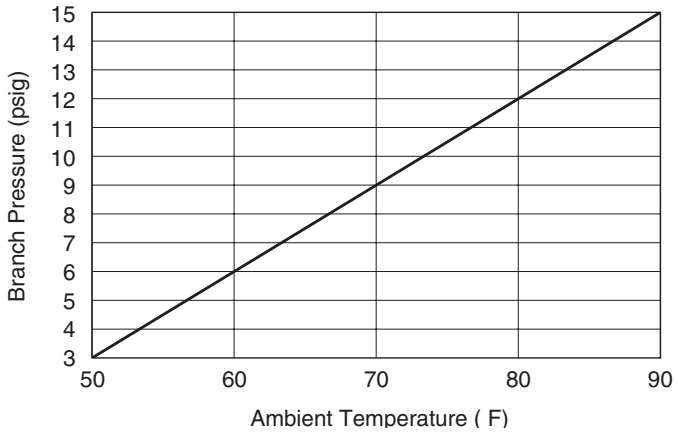

Figure 1 Branch Pressure vs. Ambient Temperature.

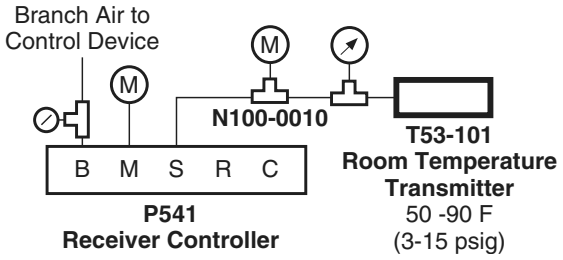

Figure 2 Typical Application.

Duct, Immersion and Outdoor-Air Temperature Transmitters

The T150 Series pneumatic temperature transmitters are designed to measure air or fluid temperatures in pneumatic control systems and transmit a fixed span, 3 to 15 psig signal to controlling and indicating devices such as receiver controllers, receiver gauges, sensitive pressure switches, or snap-acting R503-1 diverting relays. These transmitters are available with several types of sensing elements.

These transmitters are "one-pipe" devices requiring an externally restricted source of constant pressure control air. Their design features pneumatic feedback to assure accuracy and stability over their temperature span.

Features:

- Permits remote readout and/or control of temperatures associated with HVAC systems.
- Eight different ranges permit proper match of transmitter range to applications.
- Quality design and construction, with beryllium copper feedback bellows, provides excellent linearity, response and stability.
- Field-accessible "zero" adjustment.
- Liquid-filled sensing elements in the following styles:
  - 20 ft. (6.1 m) averaging, for air ducts.
  - Rigid, for immersion (in well), or air duct insertion.
  - 10 in. (25.4 cm) rigid coiled, for fast response in air ducts where averaging is not required.
  - Remote-bulb, for various applications.

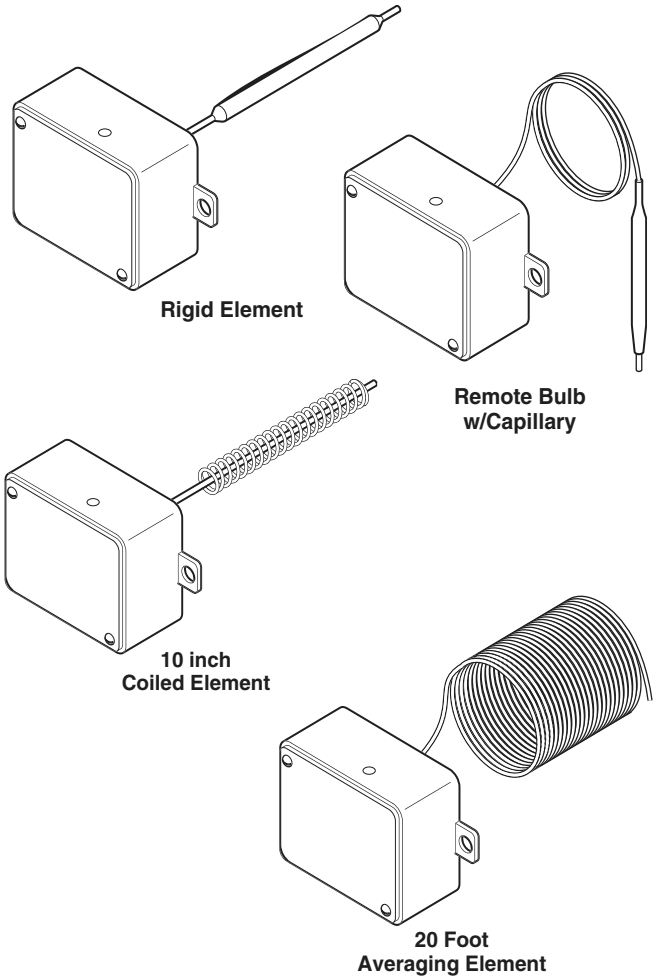

Model Chart

Model No.	Wholesale Model No.	Range (non-adjustable) °F (°C)	Span °F (°C)	Mounting	Sensing Element Description
T150-1011	2252-510	40 to 140 (4 to 60)	100 (56)	Duct or immersion	Rigid element, 1/4 x 9-3/8 in. long (6 x 238 mm)
T150-1012	2252-501			Duct	Averaging element, 20 ft. long (6 m)
T150-1013	2252-502				Rigid (coiled) element, 10 in. long (25.4 cm)
T150-1021	2252-250	0 to 100 (-18 to 38)		Duct or immersion	Rigid element, 1/4 x 9-3/8 in. long (6 x 238 mm)
T150-1022	2252-251			Duct	Averaging element, 20 ft. long (6 m)
T150-1023	2252-252				Rigid (coiled) element, 10 in. long (25.4 cm)
T150-1031	2252-610	40 to 240 (4 to 115)	200 (111)	Duct or immersion	Rigid element, 1/4 x 7-1/16 in. long (6 x 179 mm)
T150-1035	2252-635			Duct	10-1/2 x 1/4 in. (267 x 6 mm) bulb with 9 ft. (2.7 m) capillary
T150-1041	2252-110	-40 to 160 (-40 to 71)	200 (111)	Duct or immersion	Rigid element, 1/4 x 7-1/16 in. long (6 x 179 mm)

Model Chart (Continued)

Model No.	Wholesale Model No.	Range (non-adjustable) °F (°C)	Span °F (°C)	Mounting	Sensing Element Description
T150-1046	2252-703	-40 to 160 (-40 to 71)	200 (111)	Duct or outdoor air	Replaces TKS-2031. 1/4 x 2.5 in. (6 x 64 mm) bulb with 42 in. (1.1 m) capillary
T150-1054	2252-151	-25 to 125 (-32 to 52)	150 (84)	Duct or outdoor air	4 x 1/4 in. (102 x 6 mm) bulb with 3 ft. (0.9 m) capillary
T150-1055	2252-655				10-1/2 x 1/4 in. (267 x 6 mm) bulb with 9 ft. (2.7 m) capillary
T150-1062	2252-662	30 to 80 (-1 to 27)	50 (28)	Duct	Averaging element, 20 ft. long (6 m)
T150-1073	2252-273	50 to 100 (10 to 38)			Rigid (coiled) element, 10 in. long (25.4 cm)
T150-1082	2252-701	50 to 150 (10 to 66)	100 (56)	Duct	Replaces TKS-4017. Averaging element, 20 ft. long (6.1 m).
T150-1083	2252-702				Replaces TKS-9017. Rigid (coiled) element, 10 in. long (25.4 cm)

Specifications

Action	Direct, proportional.
Adjustments	None required, factory calibrated.
Supply air pressure	Clean, dry, oil free air required (Ref. EN-123).
Nominal	20 psig ±0.5 psi (138 kPa ±3.4 kPa) through 1.0 scfh restrictor.
Maximum	30 psig (207 kPa).
Output pressure	3 to 15 psig (21 to 103 kPa).
Air connection	1/8 in. -27 FNPT.
Maximum case ambient temperature	140°F (60°C).
Construction	Copper element, cast aluminum base, zinc plated steel cover.
Mounting	Duct or immersion (refer to Model Chart).
Weight	0.9 lb (0.4 kg).
Case dimensions	2-5/8 H x 3-1/16 W x 1-3/4 D in. (67 x 78 x 44 mm).

Accessories

Model No.	Wholesale Model No.	Description
100-13	20-777	Sun shield for sensing bulbs.
100-17[a]	20-778	3/8 x 7-1/32 in. copper well with 1/2 in. NPT bushing.
100-25	20-782	3/8 x 10-17/32 in. copper well with 1/2 in. NPT bushing.
100-47 [a]	20-803	Neck extension adaptor - converts 7-1/32 in. well to 10-17/32 in. well.
100-49	20-805	3/8 x 7-1/32 in. Stainless steel well with 1/2 in. NPT bushing (includes 20-803).
100-71	22-401	Adapter, brass, for mounting T150 immersion transmitter in Barber-Colman AT-201 or AT-203 well.
N4-32	20-944	Restrictor tee, copper tubing.
N100-0010	21-038	Restrictor tee, polyethylene tubing.
N100-2501	21-153	In-line restrictor.

[a] Use together for copper well with extended neck.

Typical Applications

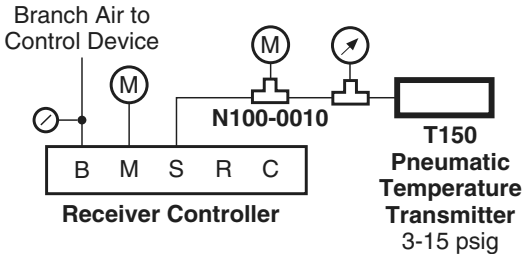

Figure 1 Typical Application.

Airstream Temperature Controllers

The T201 series are one-pipe, non-relay controllers designed primarily for use as low limit thermostats in unit ventilator and central fan system applications.

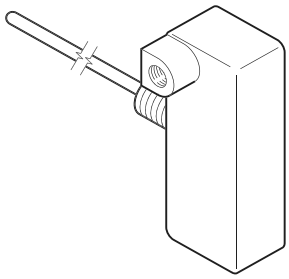

T201-023 Shown

Features:

- Rigid or averaging liquid-filled sensing elements.
- Field-adjustable throttling range.
- Simple, straightforward one-pipe (nozzle and flapper) operation (Direct-Acting).
- May be used as primary or low-limit controller.
- Includes gauge-tee and compression restrictor-tee.

Model Chart

Model No.	Wholesale Model No.	Sensing Element Style Dimensions
T201-023	2260-550	Rigid stem 3/16 x 19-3/8 in. (5 x 492 mm)
T201-024	2260-551	Averaging 3/32 in. x 8 ft. (2 mm x 2.4 m)

Specifications

Thermostat	Proportional type.
Sensing element	Liquid-filled.
Control dial range	40 to 150°F (4 to 65°C), marked Warmer-Cooler with 5°F (3°C) increments.
Throttling range	10 to 50°F (6 to 28°C), field adjustable, marked A through E.
Output air signal	3 to 15 psig (21 to 103 kPa).
Control mechanism	Mounted in steel enclosure with cover.
Restriction	External-fixed; furnished for unit ventilator applications.
Construction	White molded plastic snap-on cover, iridited aluminum base.
Action	Direct only.
Maximum bulb temperature limit	250°F (121°C).
Supply air pressure	Clean, dry, oil free air required (Ref. EN-123).
Nominal	15 to 17 psig (103 to 117 kPa).
Maximum	30 psig (207 kPa).
Air connections	1/8 in. – 27 (FNPT).
Air consumption for sizing air compressor	30 scim (8.2 mL/s).
Mounting	Insertion with two locknuts and washers on 3/8 in. NPSM threaded boss.
Case dimensions	3-31/64 H x 1-1/8 W x 1-7/16 D in. (89 x 29 x 36 mm).
Weight	Approx. 0.6 lbs. (0.3 kg).

Accessories

Model No.	Wholesale Model No.	Description
100-46	20-802	Adjustable restrictor for fan system applications.

Typical Applications

Figure 1 Typical Application (Heating-Only Unit Ventilator).

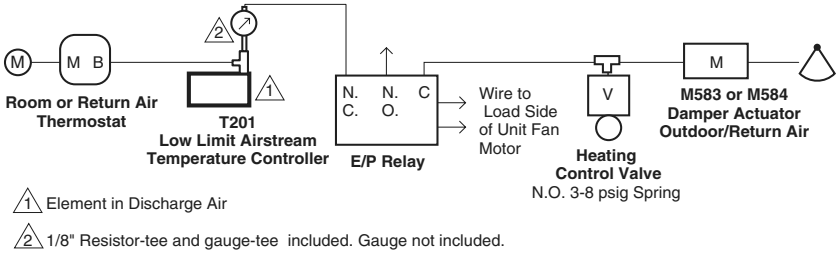

Unit Temperature Controllers

The Unit Temperature Controllers are designed for the proportional control of pneumatic devices and actuators in environmental control systems. These devices are designed primarily as return air controllers in induction units, fan coil units, and unit ventilators.

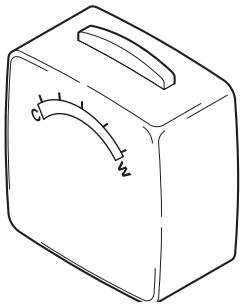

Features:

- Small size.
- Attractive appearance.
- Stable, linear response to room temperature changes.
- Sensor may be mounted up to 200 ft. (61 m) from controller; connects to controller body with 1/4 in. outside diameter (O.D.) polytube.
- Summer-winter models have snap-acting changeover from direct action to reverse action and vice versa.

Model Chart

Model No.	Wholesale Model No.	Action	Comments
T460-301	2298-060[a]	Reverse acting at 16 psig, direct acting at 25 psig	Includes metal cover and remote bimetal sensor.
T461-301	2298-061[a]	Direct	
T462-301	2298-062[a]	Reverse	
T463-301	2298-063[a]	Direct acting at 16 psig, reverse acting at 25 psig	

[a] Includes mounting bracket.

Specifications

Setpoint range	65 to 85°F.
Throttling range	4°F fixed.
Sensitivity	2.5 psig/°F fixed.
Maximum ambient temperature	140°F (60°C).
Main air pressure	Clean, dry, oil free air required (Refer to EN-123).
Nominal	T460-301: 16 psig reverse acting, 25 psig direct acting. T461-301, T462-301: 20 psig. T463-301: 16 psig direct acting, 25 psig reverse acting.
Maximum	30 psig.
Connections	Fittings for 1/4 in. O.D. plastic tubing.
Air consumption	
T460-301, T463-301	29.4 scim (8.0 mL/s) at 16 psig, 45 scim (12.3 mL/s) at 25 psig.
T461-301, T462-301	29.4 scim (8.0 mL/s) at 16 psig.
Adjustments	External or concealed.
Calibration point	Factory calibrated at 9 psig for T461 and T462; 12 psig for T460 and T463.
Mounting	Using the mounting bracket, purchased separately, or wall mounting.
Dimensions	2-1/32 H x 2-1/32 W x 1-3/8 D in. (52 x 52 x 35 mm).

Accessories

Model No.	Wholesale Model No.	Description
10-72	21-800	Setpoint adjustment cover.
100-50	20-821	Replacement sensor (RA) for T460 or T462 (2298-060 or 2298-062).
100-51	20-822	Replacement sensor (DA) for T461 of T463 (2298-061 or 2298-063).
220-07	20-818	Mounting bracket.
C13-42	20-856	Replacement cover. No logo.
N2-4	20-881	1/16 in. hexhead wrench.

Typical Applications

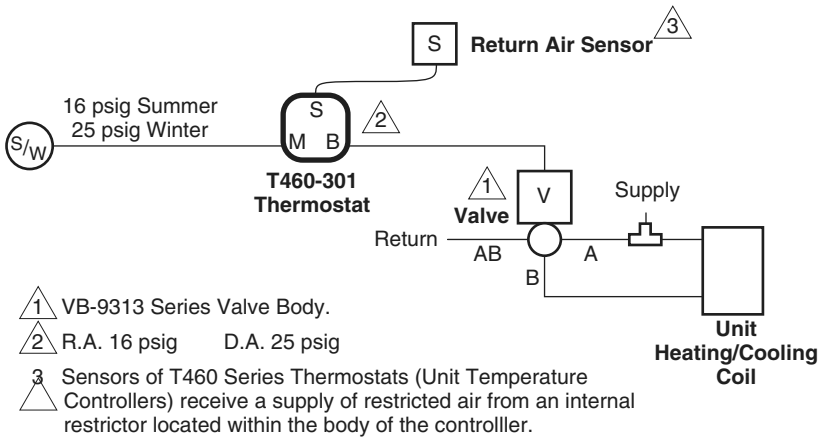

Figure 1 Typical T460-301 Summer/Winter Application.

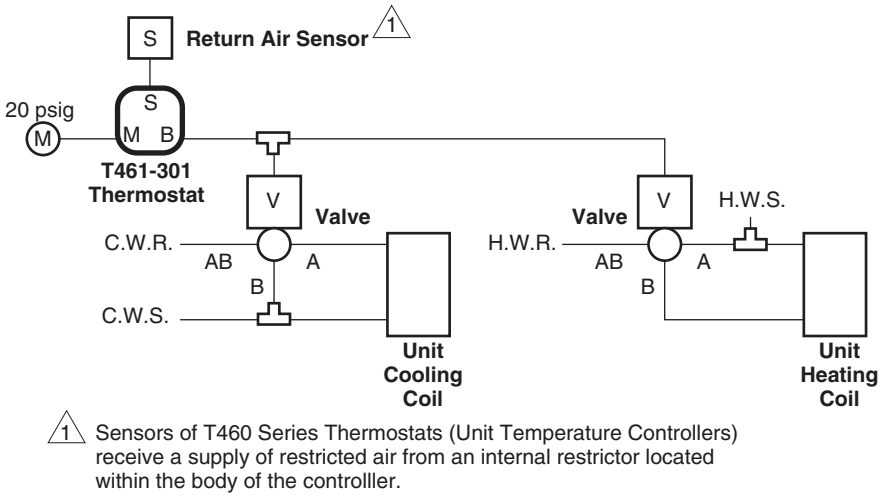

Figure 2 Typical T461-301 Heating/Cooling Application.

Single Setpoint Room Thermostats

For proportional temperature control of pneumatic valves and damper actuators to maintain room air temperatures in heating, ventilating, and air conditioning systems.

Features:

- Attractive appearance.
- Branch-line to sensing-element pneumatic feedback for linear, stable operation.
- Available with °F or °C setpoint scales and thermometers.
- Covers supplied with exposed setpoint and thermometer.
- Cover inserts included for:
  - Exposed setpoint only.
  - Blank cover.
- Aspirated versions of certain models available.

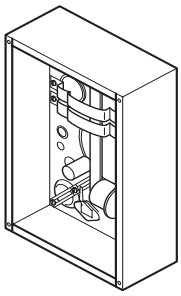

TK-1xx1-600
Aspirated Thermostat

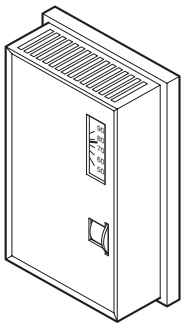

TK-1xx1
TKR-1xx1

Model Chart

Model No.	Dial Markings[a]	Control Action[b] Supply Pressure	Type Thermostat
TK-1001	55 to 85°F	Direct Acting	Two pipe
TK-1001-116	13 to 29°C		
TK-1001-600	55 to 85°F		Aspirated
TK-1101	55 to 85°F	Reverse Acting	Two pipe
TK-1101-116	13 to 29°C		
TK-1101-600	55 to 85°F		Aspirated
TK-1301		Direct Acting 15 psig day – 20 psig night	Two or three pipe with manual override
TK-1301-116	13 to 29°C		
TK-1381	55 to 85°F	Reverse Acting 15 psig day – 20 psig night	
TK-1601[c]	55 to 85°F	Direct Acting 15 psig day – 20 psig night	Two or three pipe with manual override
TK-1601-116 [c]	13 to 29°C		
TK-1681 [c]	55 to 85°F	Reverse Acting 15 psig day – 20 psig night	

[a] Dial stop pins included to limit dual range on all units.

[b] Direct Acting (D.A.) increases output pressure on temperature rise. Reverse Acting (R.A.) decreases output pressure on temperature rise.

[c] Has second white plastic tube to pass full line pressure (20 psi) at night and 0 psi at day. Used to actuate items such as pressure electric switches.

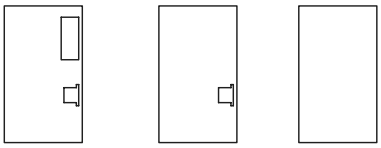

F TK-xxxx **Insert** **Insert**
C TK-xxxx-116

Figure 1 Standard Cover.

Thermostat Replacement Kits.

Model No.	Dial Markings[a]	Control Action[b] Supply Pressure	Type Thermostat
TKR-1001	55 to 85°F	Direct Acting 15 or 20 psig	Two pipe
TKR-1001-116	13 to 29°C		
TKR-1101	55 to 85°F	Reverse Acting 15 or 20 psig	
TKR-1101-116	13 to 29°C		
TKR-1201	55 to 85°F	15 psig Reverse Acting – 20 psig Direct Acting	
TKR-1281		15 psig Direct Acting – 20 psig Reverse Acting	
TKR-1301		Direct Acting 15 psig day – 20 psig night	Two or three pipe with manual override
TKR-1381		Reverse Acting 15 psig day – 20 psig night	
TKR-1601[c]		Direct Acting 15 psig day – 20 psig night	
TKR-1681 [c]		Reverse Acting 15 psig day – 20 psig night	
TKR-5001		Direct Acting 15 or 20 psig	One Pipe

[a] Dial stop pins included to limit dual range on all units.

[b] Direct Acting (D.A.) increases output pressure on temperature rise.
Reverse Acting (R.A.) decreases output pressure on temperature rise.

[c] Has second white plastic tube to pass full line pressure (20 psi) at night and 0 psi at day. Used to actuate items such as pressure electric switches.

TKR-1xx1 Includes.

Quantity	Description
1	Thermostat
1	Blank cover insert
1	Cover insert with setpoint cutout
1[a]	1/4 x 5/32 in. barbed fitting
1[a]	5/32 x 5/32 in. barbed fitting
1[a]	1/4 O.D. x 2 in. Tygon tubing
1[a]	1/4 x 1/4 in. compression to tubing fitting
1	5/64 in. Allen head cover screw
1	5/64 in. Allen head wrench

[a] Two included in TKR-1xx1; three included in TKR-16xx.

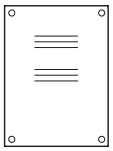

-600

Aspirated model with #6 spanner head screws (requires AT-509)
Note: Not available on TK-13xx, 16xx, and TKR-xxxx models.

Figure 2 Aspirated Thermostat Cover.

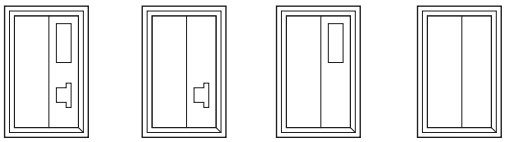

F -399	-400	-403††	-404††
C -398	-410	-413††	-414††

†† 5/64 in. Allen screw used to secure cover.

Figure 3 Options (for quantities of 24 or more of each part number). Add dash number (-xxx) suffix to base part number for desired option. For metal covers, specify TK2-xxxx-xxx.

Specifications	
Thermostat	Proportional type.
Sensing element	Bimetal.
Night setback	To 20°F (11°C) below day setpoint for Day/Night heating models.
Night setup	To 20°F (11°C) above day setpoint for Day/Night cooling models.
Control dial range	Refer to Model Chart.
Throttling Range	
TK-1xx1, TKR-1xx1	Adjustable 2 to 10°F/10 psi, factory set at 4°F/10 psi.
Output air signal	0.5 psig to supply air pressure -0.5 psig.
Action	Refer to Model Chart.
Ambient limits	
Shipping	-40 to 150°F (-40 to 65°C). 0 to 98% RH, non-condensing.
Operating	40 to 150°F (4 to 65°C). 10 to 98% RH, non-condensing.
Supply air pressure	Clean, oil free, dry air required (reference EN-123).
Nominal	Refer to Model Chart.
Maximum	30 psig (207 kPa).
Air connections	
Main (black)	5/32 in. dia. spring reinforced plastic tube.
Branch (white)	5/32 in. dia. spring reinforced plastic tube.
Air consumption for sizing air compressor	
TK/TKR-1001, 1001-116, 1101, 1101-116, 12x1, 13x1, TK-1301-116	13.8 scim (3.8 mL/s).
TK-1001-600, 1101-600, 16x1-116, TK/TKR-16x1	41.5 scim (11.3 mL/s).
Air capacity for sizing air mains	
TK/TKR-1001, 1001-116, 1101, 1101-116, 13x1, 1301-116	16 scim (4.4 mL/s).
TK-1001-600, 1101-600	56 scim (15.3 mL/s).
TK/TKR-13x1, 12x1, TK-1301-116	80 scim (21.8 mL/s).
TK/TKR-16x1	104 scim (28.4 mL/s).
TK/TKR-16x1-116	144 scim (39.3 mL/s).
Cover	Beige plastic as standard except aspirated versions. Aspirated units have brushed stainless steel covers.
Mounting	Upright position on wall.

Specifications (Continued)

Dimensions

TK-1xx1, TK-1xx1-116, TKR-1xx1, TKR-1xx1-116	4-3/8 H x 2-3/4 W x 1-5/8 D in. (111 x 70 x 43 mm).
TK-1xx1-600	Wall Box: 5 H x 3-1/2 W x 2-1/2 D in. (127 x 89 x 64 mm). Cover: 5-1/2 H x 4 W in. (140 x 102 mm).

Accessories

Model No.	Description
For two pipe (non-aspirated) or bleed type thermostats (TK-1xxx)	
AT-61 Series	Cover inserts.
AT-84 Series	Digital thermometer cover kit, plastic cover (TK-13xx, TK-16xx only).
AT-101	Lock cover kit.
AT-104[a]	Dial stop pins.
AT-504	Plaster hole cover (small).
AT-505	Surface mounting base.
AT-506	Pneumatic wall box fitting (two tubes for TK-100x and 110x).
AT-532-111-1-01	0.0075 tee restrictor for 5/32 in. plastic tubing.
AT-532-111-1-03	.010" Tee restrictor. 5/32" Tubing.
AT-532-222-1-02	0.0075 tee restrictor for 1/4 in. plastic tubing.
AT-533-101	Adaptor 1/4 in. plastic to 5/32 in. plastic.
AT-533-127	Adaptor 3/16 in. copper or 1/4 in. copper with 1/4 in. solder coupling (not included) to 5/32 in. plastic.
AT-536	Pneumatic wall thermostat conversion kit.
AT-546	Auxiliary mounting base.
TOOL-015	Spanner head driver to #6 spanner head screws.
For two pipe aspirated type thermostats (TK-1xxx-600)	
AT-509	Wall box required for aspirated thermostats.
AT-533-101	Adapter 1/4 in. plastic to 5/32 in. plastic.
AT-533-127	3/16 in. copper or 1/4 in. copper with 1/4 in. solder coupling (not included) to 5/32 in. plastic.
AT-533-129	5/32" x 5/32" barbed brass connector.
For all models	
TOOL-095-1	Pneumatic calibration tool kit.

[a] All thermostats are shipped with two dial stop pins.

Typical Applications

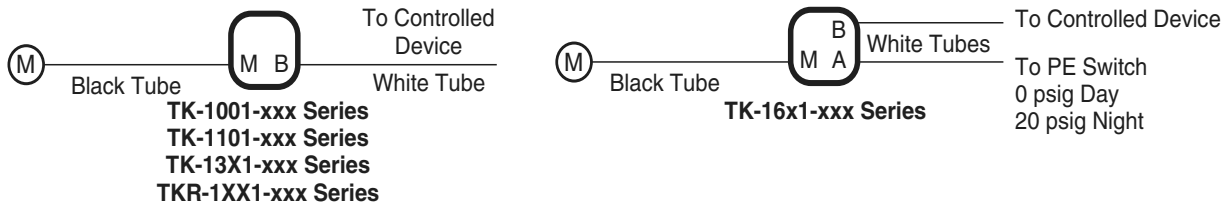

Figure 4 Two Pipe (Relay) Type.

Submaster Room Thermostats

For proportional control of pneumatically-actuated valves and damper actuators to maintain room air temperature in heating, ventilating and air conditioning systems.

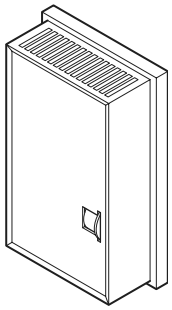

TK-1xxx

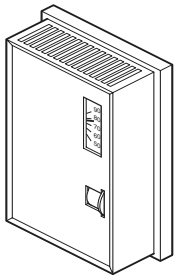

TK-1171

Features:

- Attractive appearance.
- Branch-line to sensing-element pneumatic feedback for linear, stable operation.
- Available with °F or °C setpoint scales and thermometers.
- Covers supplied with exposed setpoint and thermometer.
- Cover inserts included for:
  - Exposed setpoint only.
  - Blank cover.
- Aspirated versions of certain models available.

Model Chart

Model No.	Output Action[a]	Submaster Reset Action[b]	Dial[c] Marking
TK-1071	Direct	Direct	55 to 85°F
TK-1071-116 [d]			13 to 29°C
TK-1171[d]	Reverse	Reverse	55 to 85°F

[a] Direct Acting (D.A.) — Increase output pressure on temperature rise.
Reverse Acting (R.A.) — Decrease output pressure on temperature rise.

[b] Direct Reset — Increase in master pressure raises setpoint.
Reverse Reset — Increase in master pressure lowers setpoint.

[c] Dial stop pins included to limit dial range.

[d] Not available to Controline or Wholesale.

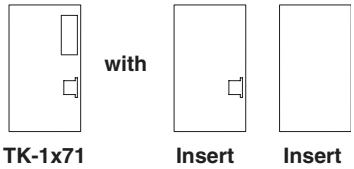

Figure 1 Standard Covers.

Specifications

Thermostat	Proportional type.
Sensing element	Bimetal.
Control dial range	Refer to Model Chart.
Setpoint	Remotely resettable by changing the reset pressure.
Throttling range	Adjustable 2 to 10°F/10 psi (-17 to -12°C/69 kPa), factory set at 4°F/10psi (-16°C/69 kPa).
Reset range	Adjustable 0.15°F/psi (-18°C/kPa) to 2°F/psi (-17°C/kPa) master pressure change, factory set at 0.5°F/psi (-18°C/kPa).
Output air signal	0.5 psig (3.4 kPa) to supply air pressure -0.5 psig (-3.4 kPa).
Output and reset action	Refer to Model Chart.

Specifications (Continued)

Ambient limits	
Shipping	-40 to 150°F (-40 to 65°C). 0 to 98% R.H., non-condensing.
Operating	40 to 150°F (4 to 65°C). 10 to 98% R.H., non-condensing.
Supply air pressure	Clean, oil free, dry air required (Ref. EN-123).
Nominal	20 psig (138 kPa).
Minimum	15 psig (103 kPa).
Maximum	30 psig (207 kPa).
Reset air pressure	
Nominal	0 to 20 psig (0 to 138 kPa).
Maximum	30 psig (207 kPa).
Air connections	
Main (black)	5/32 in. dia. spring reinforced plastic tube.
Reset and branch (white)	5/32 in. dia. spring reinforced plastic tube.
Air consumption for sizing air compressor	
TK-1X71, TK-1071-116	13.8 scim (3.8 mL/s).
Aspirated models[a]	41.5 scim (11.3 mL/s).
Air capacity for sizing air mains	
TK-1X71, TK-1071-116	16 scim (4.4 mL/s).
Aspirated models [a]	64 scim (17.5 mL/s).
Cover	Beige plastic as standard except aspirated models. Aspirated models have brushed stainless steel covers.
Mounting	Upright position on wall.
Dimensions	4-3/8 H x 2-3/4 W x 1-5/8 D in. (111 x 70 x 43 mm).

[a] With the addition of AT-509 aspirating box.

Accessories

Model No.	Description
AT-11-600	Aspirating kit.
AT-61 Series	Cover inserts.
AT-101	Lock cover kit.
AT-104	Dial stop pins. (NOTE: Pins included with each unit.)
AT-504	Plaster hole cover (small).
AT-505	Surface mounting base.
AT-506	Pneumatic wall box fitting.
AT-509	Wall box required for aspirated thermostats.
AT-536	Pneumatic wall thermostat conversion kit.
AT-546	Auxiliary mounting base.
AT-533-101	Adapter 1/4 in. plastic to 5/32 in. plastic.
AT-533-127	Adapter 3/16 in. copper or 1/4 in. copper with 1/4 in. solder coupling (not included) to 5/32 in. plastic.
AT-533-129	5/32" x 5/32" barbed brass connector.
TOOL-015	Spanner head driver for #6 spanner head screws.
TOOL-095-1	Pneumatic calibration tool kit.

Typical Applications

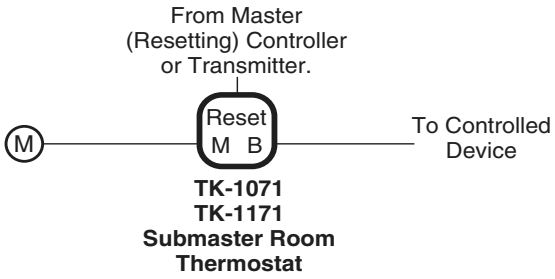

Figure 2 Typical Application.

Dual Setpoint, Single Output Room Thermostats

For proportional control of pneumatic-actuated valves and damper actuators to maintain room air temperatures in heating, ventilating, and air conditioning systems.

Features:

- Attractive appearance.
- Branch-line to sensing-element pneumatic feedback for linear, stable operation.
- Available with °F or °C setpoint scales and thermometers.
- Covers supplied with exposed setpoint and thermometer.
- Cover inserts included for:
  - Exposed setpoint only.
  - Blank cover.
- Aspirated versions of certain models available.

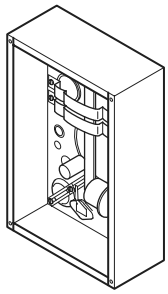

TK-17xx-600
Aspirated Thermostat

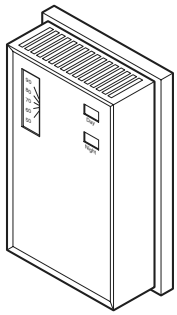

TK-17xx

Model Chart

Model No.		15 psig Supply Pressure			20 psig Supply Pressure[a]		
°F	°C[b]	Dial Range[c]	Control Action[d]	Cover Legend	Dial Range[c]	Control Action[d]	Cover Legend
TK-1717[e]	TK-1717-116	55 to 85°F (13 to 29°C)	Direct	Heat[f]	55 to 85°F (13 to 29°C)	Direct	Cool
TK-1727[e]	TK-1727-116		Reverse			Reverse	
TK-1731[e]	TK-1731-116		Reverse			Direct	
TK-1741[e]	TK-1741-116		Direct			Reverse	
TK-1711[e] TK-1751[g]	TK-1711-116 TK-1751-116[g]		Direct	Day		Direct	Night
TK-1721[e] TK-1761[g]	TK-1721-116		Reverse			Reverse	

[a] 22 psi required if setpoints are more than 20°F apart.

[b] Celsius models not available for wholesale.

[c] Control dial is marked in °F on one side and °C on the other side. Units have built-in stops that can limit high and/or low setting of each dial.

[d] Direct Acting (D.A.) — Increase output pressure on temperature rise.
Reverse Acting (R.A.) — Decrease output pressure on temperature rise.

[e] These models available in aspirated versions, add -600 to model number.

[f] Use AT-67 series cover plate to reverse heat/cool legends.

[g] Units include a manual override lever for overriding 22 psig (152 kPa) operation and placing control into 15 psig (103 kPa) control mode when unit is supplied with 22 psig (152 kPa). Lever automatically resets when supply pressure is reduced to 15 psig (103 kPa).

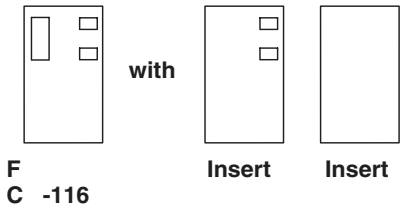

Figure 1 Standard Covers.

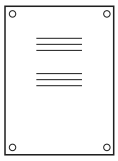

-600

Aspirated model with #6 spanner head screws (requires AT-509)
Note: Not available on TK-175x and TK-176x models. Available on TAC models only.

Figure 2 Aspirated Thermostat Cover.

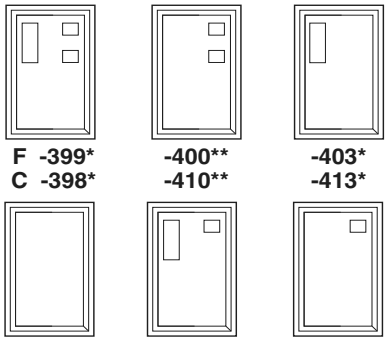

F -399*
C -398*

-400**
-410**

-403*
-413*

-404
-414

-408**

-409**

-400
-403
The only optional covers available to Controline and Uni-Line.

* Units have external thermometers.
** Units have internal setpoint adjustment: setpoint can be seen externally. Knob(s) are provided to modify the unit to exterrnal adjustment.

Figure 3 Optional Covers. (For quantities of 24 or more of same part number).
Add "dash number" (-xxx) suffix to base part number for desired option. For metal covers, specify TK2-17xx-xx.

Specifications	
Thermostat	Proportional two pipe type. Two pressure Heating/Cooling or Day/Night thermostats switch between two bimetal sensors.
Sensing element	Two bimetals.
Control dial range	Two independent with stops. Refer to Model Chart.
Throttling range	Independently adjustable for each setpoint dial 2 to 10°F/10 psi change in branch line pressure, factory set at 4°F/10 psi.
Output air signal	0.5 psig (3.4 kPa) to supply air -0.5 psig (-3.4 kPa).
Action	Refer to Model Chart.
Ambient limits	
Shipping	-40 to 150°F (-40 to 65°C). 0 to 98% R.H., non-condensing.
Operating	20 to 115°F (-7 to 46°C). 10 to 98% R.H., non-condensing.
Supply air pressure	Clean, oil free, dry air required (reference EN-123).
Requires	15 and 22 psig (103 and 152 kPa) dual pressure. Refer to Model Chart.
Maximum	30 psig (207 kPa).

Specifications (Continued)

Air connections	
Main (black)	5/32 in. dia. spring reinforced plastic tube.
Branch (white)	5/32 in. dia. spring reinforced plastic tube.
Air consumption for sizing air compressor	
TK-17xx	13.8 scim (3.8 mL/s).
TK-17xx-600 (Aspirated models)	41.5 scim (11.3 mL/s).
Air capacity for sizing air mains	
TK-17xx	80 scim (21.8 mL/s).
TK-17xx-600 (Aspirated models)	120 scim (32.7 mL/s).
Cover	Beige plastic with brushed bronze metal inserts as standard except aspirated models. Aspirated models have brushed stainless steel covers.
Mounting	Upright position on wall.
Dimensions	
TK-17xx	4-3/8 H x 2-3/4 W x 1-5/8 D in. (111 x 70 x 43 mm).
TK-17xx-600 (Aspirated models)	Wall box: 5 H x 3-1/2 W x 2-1/2 D in. (127 x 89 x 64 mm). Cover: 5-1/2 H x 4 W in. (140 x 102 mm).

Accessories

Model No.	Description
AT-65 Series	Cover inserts.
AT-67	Brushed bronze cover plates (cooling/heating).
AT-504	Plaster hole cover.
AT-505	Surface mounting base.
AT-506	Pneumatic wall box fitting.
AT-509	Wall box required for aspirated thermostats.
AT-536	Pneumatic wall thermostat conversion kit.
AT-546	Auxiliary mounting base.
AT-533-101	Adapter 1/4 in. plastic to 5/32 in. plastic.
AT-533-127	Adapter 3/16 in. copper or 1/4 in. copper with 1/4 in. solder coupling (not included) to 5/32 in. plastic.
AT-533-129	5/32" x 5/32" barbed brass connector.
TOOL-015	Spanner head driver for #6 spanner head screws.
TOOL-080-1	Calibration tool.
TOOL-095-1	Pneumatic calibration tool kit.

Typical Applications

Figure 4 Typical Application.

Zero Energy Band Room Thermostats

For proportional control of pneumatically-operated sequenced heating and cooling valves and/or damper actuators to maintain room air temperature with a zero energy band between heating and cooling in heating, ventilating, and air conditioning systems.

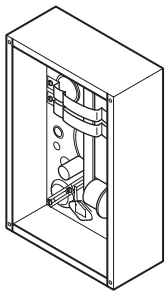

TK-18x1-600
TKR-18x1-600

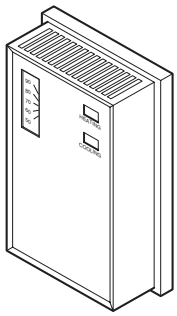

TK-18x1
TKR-18x1

Features:

- Attractive appearance.
- Branch-line to sensing-element pneumatic feedback for linear, stable operation.
- Covers supplied with exposed setpoints and thermometer.
- Cover inserts included for:
  - Exposed setpoints only.
  - Blank cover.
- Aspirated versions available.

Model Chart

Model No.[a]	Control Action[b]	Dial Range[c]
TK-1801	Direct	55 to 85°F (13 to 29°C)
TK-1801	Reverse	
Thermostat Replacement Kits.		
TKR-1801	Reverse	55 to 85°F (13 to 29°C)
TKR-1811	Direct	

[a] Celsius models not available for wholesale.

[b] Direct Acting (D.A.) — Increase output pressure on temperature rise.
Reverse Acting (R.A.) — Decrease output pressure on temperature rise.

[c] Control dial marked °F on one side and °C on the other side; built-in dial stops can limit high and/or low setting of each dial.

TKR-18x1 Includes.

Quantity	Description
1	TK-18x1 thermostat
1	Blank cover insert
1	Cover insert with setpoint cutout
2	1/4 x 5/32 in. barbed fitting
2	5/32 x 5/32 in. barbed fitting
2	1/4 in. O.D. x 2 in. Tygon tubing
2	1/4 x 1/4 in. compression to tubing fitting
1	5/64 in. Allen head cover screw
1	5/64 in. Allen head wrench

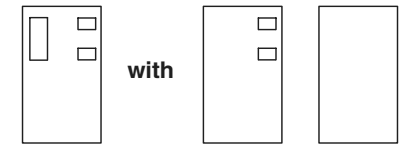

F
C -116

Insert Insert

Figure 1 Standard Covers.

Aspirated model
(requires AT-509)
Note: Not available on
TKR-18x1 models.
Available to TAC only.

-600

Figure 2 Aspirated Thermostat Cover.

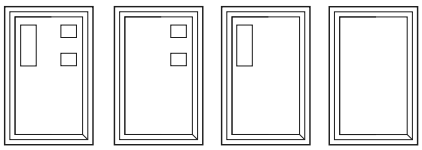

-400
The only optional covers
available to Controline
and Uni-Line.

F -399*	-400**	-403*	-404
C -398*	-410**	-413*	-414

* Units have external thermometers.
** Units have internal setpoint adjustment;
setpoint can be seen externally.
Knob(s) are provided to modify the
unit to exterrnal adjustment.

Figure 3 Optional Covers. (For quantities of 24 or more of same part number).
Add "dash number" (-xxx) suffix to base part number for desired option. TKR-18x1 available with -116 options only.
For metal covers, specify TK2-18x1-xx.

Specifications	
Thermostat	Proportional two pipe type. Thermostat maintains constant branch pressure when temperature is between dial setpoints.
Sensing elements	Two bimetals.
Control dial range	Two independent with stops. Refer to Model Chart.
Throttling range	Adjustable 2 to 10°F/10 psi, change in branch pressure when temperature is not between dial setpoints, factory set at 4°F/10 psi.
Output air signal	0.5 psig (3.4 kPa) to supply air pressure -0.5 psig (-3.4 kPa).
Zero energy band pressure	Adjustable 5 to 11 psig (34 to 76 kPa), factory set at 8 psig (55 kPa).
Action	Refer to Model Chart.
Ambient limits	
Shipping	-40 to 150°F (-40 to 65°C). 0 to 98% R.H., non-condensing.
Operating	20 to 115°F (-7 to 46°C). 10 to 98% R.H., non-condensing.
Supply air pressure	Clean, oil free, dry air required (reference EN-123).
Nominal	20 psig (138 kPa).
Minimum	15 psig (103 kPa).
Maximum	30 psig (207 kPa).
Air connections	
Main (black)	5/32 in. dia. spring reinforced plastic tube.
Branch (white)	5/32 in. dia. spring reinforced plastic tube.

Specifications (Continued)

Air consumption for sizing air compressor	
TK-18x1, TKR-18x1	21 scim (5.7 mL/s).
TK-18x1-600 (Aspirated models)	48.4 scim (13.2 mL/s).
Air capacity for sizing air mains	
TK-18x1, TKR-18x1	16 scim (4.4 mL/s).
TK-18x1-600	56 scim (15.3 mL/s).
Cover	Beige plastic with brushed bronze metal insert as standard except aspirated models. Aspirated models have brushed stainless steel covers.
Mounting	Upright position on wall.
Dimensions	
TK-18x1, TKR-18x1	4-3/8 H x 2-3/4 W x 1-5/8 D in. (111 x 70 x 43 mm).
TK-18x1-600	Wall box: 5 H x 3-1/2 W x 2-1/2 D in. (127 x 89 x 64 mm). Cover: 5-1/2 H x 4 W in. (140 x 102 mm).

Accessories

Model No.	Description
AT-11-600	Aspirating Kit.
AT-65 Series	Cover inserts.
AT-504	Plaster hole cover.
AT-505	Surface mounting base.
AT-506	Pneumatic wall box fitting.
AT-509	Wall box required for aspirated thermostats.
AT-536	Pneumatic wall thermostat conversion kit.
AT-546	Auxiliary mounting base.
AT-533-101	Adapter 1/4 in. plastic to 5/32 in. plastic.
AT-533-127	Adapter 3/16 in. copper or 1/4 in. copper with 1/4 in. solder coupling (not included) to 5/32 in. plastic.
AT-533-129	5/32" x 5/32" Barbed Brass Connector
TOOL-015	Spanner head driver.
TOOL-080-1	Changeover/dial.
TOOL-095-1	Pneumatic calibration tool kit.

Typical Applications

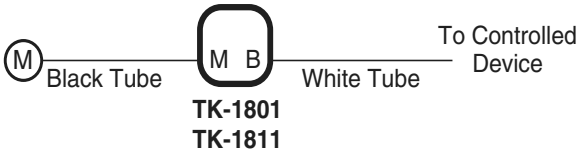

Figure 4 Typical Application.

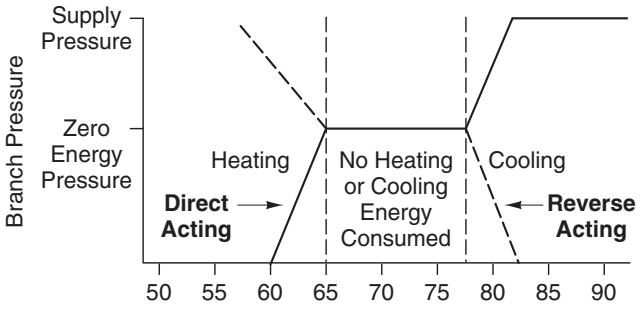

Figure 5 Typical Usage.

Unitary Bulb Thermostats

For proportional temperature control of pneumatic valves and actuators to maintain discharge temperature of reheat systems and sampling chamber or return air temperature of terminal units and as a proportional low limit thermostat.

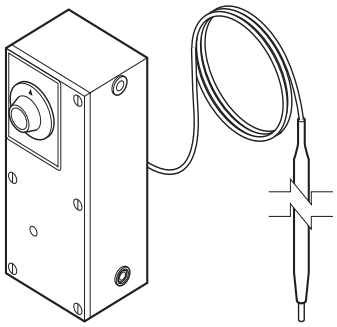

Features:

- Proportional, two-pipe nozzle and flapper design.
- One-pipe model available for use as low-limit controller.
- Adjustable throttling range.
- Straight, coiled or averaging liquid-filled sensing elements.
- Rugged design.
- Direct Acting or DA/RA models available.

Model Chart

Model No.	Description and Action[a] psi (kPa)	Max. Safe Bulb Temp. °F (°C)	Bulb Style Dimensions in. (mm)	Control Dial Range °F (°C)	Throttling Range	Supply Air Pressure psig (kPa)
TK-2001	Heating D.A.[b]	140 (60)	Straight 1/4 x 11-1/2 (6.35 x 287)	Dial Marked "Cooler-Warmer" 60 to 90 (15 to 32)	Adjustable 2 to 10°F (1 to 6°C)/ 10 psi (69 kPa) Factory Set 4°F (2°C)/ 10 psi (69 kPa)	15 (103) Minimum 20 (138) Nominal
TK-3001			Coiled 1 x 5 (25 x 127)			
TK-4001			Averaging 1/8 x 48 (3 x 1.2 m)			
TK-2201	Heating-Cooling 20 (138) D.A. 15 (103) R.A.		Straight 7/32 x 14 (6 x 356)			15 (103) R.A.[a] Cooling 20 (138) D.A.[a] Heating
TK-3201			Coiled 1 x 5 (25 x 127)			
TK-2012	Heating D.A.[b]	230 (110)	Straight 3/16 x 11-1/4 (5 x 286)	Dial Marked "Cooler-Warmer" 30 to 90 (-1 to 32)	Adjustable 5 to 25°F (3 to 14°C)/ 10 psi (69 kPa) Factory Set 10°F (6°C)/ 10 psi (69 kPa)	15 (103) Minimum 20 (138) Nominal
TK-4012			Averaging 3/32 x 54 (2 x 1.4 m)			
TK-4212	Heating-Cooling 20 (138) D.A. 15 (103) R.A.		Averaging 3/32 x 54 (2 x 1.4 m)			15 (103) R.A.[a] Cooling 20 (138) D.A.[a] Heating
TK-4212-201	Heating-Cooling Low Limit[c] 20 (138) D.A. Full Output 15 (103)		Averaging 3/32 x 54 (2 x 1.4 m)			15 (103) Full Output 20 (138) D.A.[a] Heating

[a] Direct Acting (D.A.) — Increase output pressure on temperature rise.
Reverse Acting (R.A.) — Decrease output pressure on temperature rise.

[b] Field changeable to reverse acting.

[c] At 20 psi (138 kPa) unit can bleed down a branch line from a controlling thermostat.
At 15 psi (103 kPa) unit is inoperative, i.e., passes controlling thermostat signal.

Specifications

Thermostat	Proportional type using balanced lever system.
Sensing element	Liquid-filled copper with 3 ft. (914 mm) capillary.
Control dial range	Refer to Model Chart.
Throttling range	Refer to Model Chart.
Output air signal	1 psig (6.9 kPa) to supply air pressure -1.0 psig (-6.9 kPa).
Action	Refer to Model Chart.
Ambient limits	
Shipping	-40 to 140°F (-40 to 60°C). 0 to 98% R.H., non-condensing.
Case operating	40 to 140°F (4 to 60°C). 10 to 98% R.H., non-condensing.
Bulb	Refer to Model Chart.
Supply air pressure	Clean, oil free, dry air required (reference EN-123).
Nominal	Refer to Model Chart.
Minimum	Refer to Model Chart.
Maximum	30 psig (207 kPa).
Air connections	Post with barb for 1/4 in. O.D. plastic tubing.
Air consumption for sizing air compressor	27.6 scim (8 mL/s) at 15 psig (103 kPa), 41.5 scim (11 mL/s) at 20 psig (138 kPa).
Air capacity for sizing air mains	40 scim (11.1 mL/s) at 15 psig (103 kPa), 56 scim (15.7 mL/s) at 20 psig (138 kPa).
Mounting	Directly by means of top mounting holes or with a right angle mounting bracket included with thermostat.
Case dimensions	4-5/8 H x 2-1/8 W x 1-5/8 D in. (117 x 54 x 41 mm).

Accessories

Model No.	Description
AT-11-600	Aspirating kit.
AT-208	Duct mounting kit.
TOOL-095-1	Pneumatic calibration tool kit.

Typical Applications

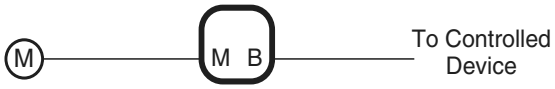

TK-2xxx
TK-3xxx
TK-4xxx Except TK-4212-201
Unitary Bulb Thermostat

Figure 1 Typical Application.

Relay Bulb Thermostats

For proportional temperature control of pneumatic valves and actuators to maintain air or liquid temperatures in duct, plenum chambers, liquid lines, tanks, etc. May also be used as a low limit thermostat.

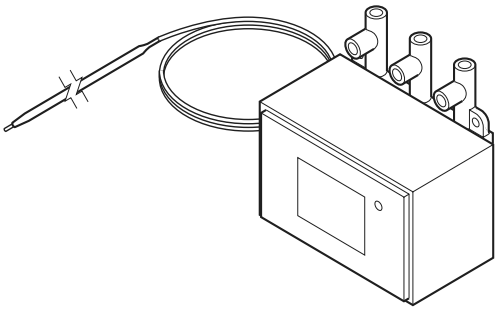

TK-6024 Shown

Features:

- Two-pipe (Main and Branch) controllers.
- Direct or Reverse Action.
- Liquid-filled sensing elements: Remote-bulb with 6 ft. (1.8 m) capillary, or 8 ft. (2.44 m) averaging element.
- Field-adjustable throttling range.

Model Chart

Model No.	Action	Bulb	
		Style	Dimensions
TK-6024	D.A.[a]	Straight	3/8 x 4-5/8 in. (9.5 x 117 mm).
TK-8024		Averaging	3/32 in.x 8 ft. (2.4 mm x 2.4 m).
TK-6124	R.A. [a]	Straight	3/8 x 4-5/8 in. (9.5 x 117 mm).
TK-8124		Averaging	3/32 in. x 8 ft. (2.4 mm x 2.4 m).

[a] Direct Acting (D.A.) — Increase output pressure on temperature rise.
Reverse Acting (R.A.) — Decrease output pressure on temperature rise.

Specifications

Thermostat	Proportional two pipe type. Thermostats are ambient compensated.
Sensing element	Remote liquid-filled copper.
Control dial range	-20 to 240°F (-29 to 115°C). Shipped as -20 to 120°F, reverse side of dial 100 to 240°F.
Throttling range	Adjustable 3 to 35°F/10 psi (2 to 19°C/69 kPa) change in output, factory set at 5°F (3°C).
Output air signal	0.5 psig (3.4 kPa) to supply air pressure -0.5 psig (-3.4 kPa).
Action	Refer to Model Chart.
Ambient limits	
Shipping	-40 to 150°F (-40 to 65°C). 0 to 98% R.H., non-condensing.
Case operating	40 to 150°F (4 to 65°C). 10 to 98% R.H., non-condensing.
Bulb	310°F (154°C) maximum.
Supply air pressure	Clean, oil free, dry air required (reference EN-123).
Nominal	20 psig (138 kPa).
Minimum	15 psig (103 kPa).
Maximum	30 psig (207 kPa).
Air connections	1/8 in. FNPT for main, branches, and AL-362 gages (not included).
Air consumption for sizing air compressor	13.8 scim (3.8 mL/s).
Air capacity for sizing air mains	16 scim (4.4 mL/s).
Mounting	Upright position on a wall or vertical flat surface.
Bulb dimensions	Refer to Model Chart.
Capillary length	6 ft. (1.8 m).
Case dimensions	5-13/16 H x 6-3/16 W x 4 D in. (148 x 157 x 102 mm).

Accessories

Model No.	Description
AL-362	Stem mounted back connected 0 to 30 psi gauge.
AT-201	3/8 x 9-1/2 in. with 3/4 in. MNPT copper bulb well requires AT-209.
AT-203	3/8 x 9-1/2 in. with 3/4 in. MNPT stainless steel bulb well requires AT-209.
AT-206	3/8 x 4-1/2 in. with 1/2 in. MNPT copper bulb well.
AT-208	Duct mounting kit.
AT-209	Liquid line or tank mounting kit.
AT-211	Bulb shield.
AT-539	Pilot pressure kit.
TOOL-095-1	Pneumatic calibration tool kit (required for use as low limit thermostat).

Typical Applications

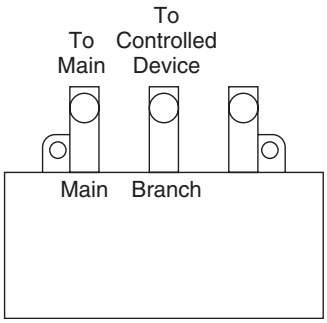

Figure 1 Typical Application.

Relay Bulb Thermostats

For proportional temperature control of pneumatic valves and actuators to maintain air temperatures in duct, plenum chambers, etc.

Features:

- Direct Acting with 18-1/4 in. (.46 m) rigid rod and tube sensing element, or with 8 ft. (2.44 m) averaging element.
- Direct or Reverse Acting with 8 ft. averaging element.
- Non-bleed, force-balance design uses air only when moving actuator.
- Field-adjustable throttling range.

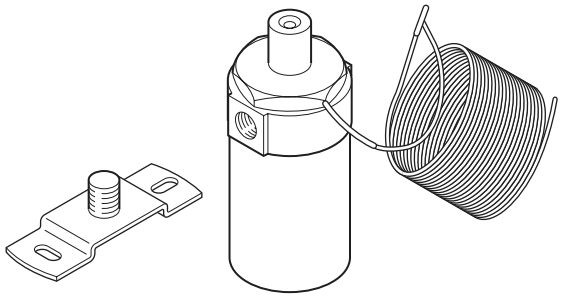

TK-9838

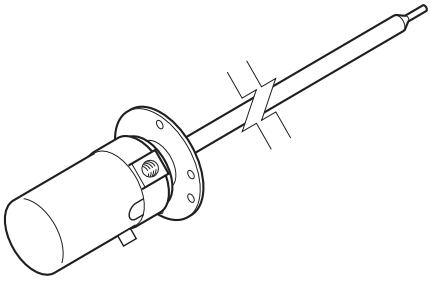

TK-9637
TK-9737

Model Chart

Model No.	Action[a]	Dial Range °F (°C)[b]	Throttling Range (Adjustable)	Element	
				Maximum Temp. °F (°C)	Dimensions
TK-9637	D.A.	30 to 180 (-1 to 82)	5 to 40°F/10 psi (3 to 22°C/69 kPa)	225 (107)	7/16 in. (11 mm) diameter 18-1/4 in. (46 m) long
TK-9737	R.A.			250 (121)	
TK-9838	D.A.	35 to 145 (1 to 63)	3 to 30°F/10 psi (2 to 17°C/69 kPa)	210 (99)	3/32 in. (2.4 m) diameter 8 ft. (2.4 m) long

[a] Direct Acting (D.A.) — Increase output pressure on temperature rise.
Reverse Acting (R.A.) — Decrease output pressure on temperature rise.

[b] Dual marked.

Specifications

Sensing Element	
TK-9637 and TK-9737	Rod and tube (bimetal).
TK-9838	Liquid filled averaging bulb.
Thermostat	Proportional relay type for mounting in ducts.
Control dial range	Refer to Model Chart.
Throttling range	Refer to Model Chart.
Output air signal	0.5 psig (3.4 kPa) to supply air pressure -0.5 psig (-3.4 kPa).
Action	Refer to Model Chart.
Ambient limits	
Shipping	-40 to 180°F (-40 to 82°C). 0 to 98% R.H., non-condensing.
Case operating	40 to 180°F (4 to 82°C). 10 to 98% R.H., non-condensing.
Element	Refer to Model Chart.

Specifications (Continued)

Supply air pressure	Clean, oil free, dry air required (reference EN-123).
Nominal	20 psig (138 kPa).
Minimum	15 psig (103 kPa).
Maximum	30 psig (207 kPa).
Air connections	1/8 in. FNPT. Marked “S” for main, “R” for branch.
Air consumption for sizing air compressor	13.8 scim (3.8 mL/s).
Air capacity for sizing air mains	16 scim (4.4 mL/s).
Mounting	On duct.
Element dimensions	Refer to Model Chart.
Case dimensions	4 H x 3-1/2 W x 3 D in. (102 x 89 x 76 mm).

Accessories

Model No.	Description
AT-208	Bulb mounting flange (2 required) TK-9838 only.
TOOL-095-1	Pneumatic calibration tool kit.

Typical Applications

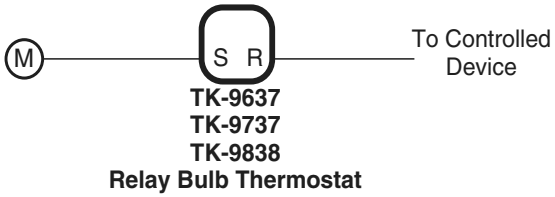

Figure 1 Typical Application.

Room and Light Troffer Temperature Transmitters

For proportional temperature control used with RKS Series receiver-controllers. May be used with one or more calibrated gauges for continuous temperature indication at any local or remote position.

Features:

- Force balance pneumatic feedback provides stable operation.
- Highly sensitive bimetal sensing element.
- Three different models to suit various applications.

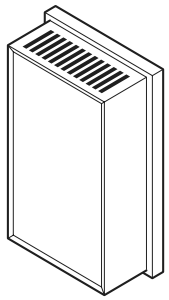

TKS-5001

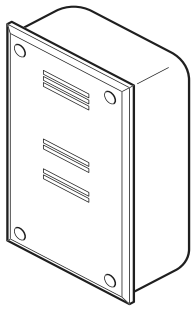

TKS-5001-600

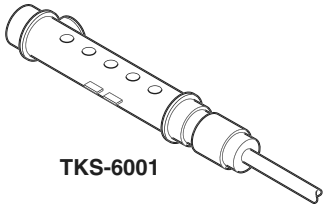

TKS-6001

Model Chart

Model No.	Mounting	Range (Non-Adj.) °F (°C)	Span °F (°C)	Sensing Element Description	Cover	Ambient Temperature Limits °F (°C)	Air Connections	Dimensions H x W x D in. (mm)
TKS-5001	Wall[a]	50 to 100 (10 to 38)	50 (28)	Bimetal	Beige Plastic	Shipping: -40 to 150 (-40 to 65) Operating: 50 to 100 (10 to 38)	5/32 in. dia. spring reinforced plastic tube	4-3/8 x 2-3/4 x 1-5/8 (111 x 70 x 41)
TKS-5001-600	Aspirating				Brushed chrome		Barbed fittings for 1/4 in. plastic tubes	5 x 3-1/2 x 2-1/2 (127 x 89 x 64) Cover: 5-1/2 x 4 (140 x 102)
TKS-6001	Light Troffer [a]				N.A.		5/32 in. dia. spring reinforced plastic tube	3/8 x 3/8 x 3 (10 x 10 x 76)

[a] Order fittings separately for type of wall construction.

Specifications

Ambient temperature	Refer to Model Chart.
Output air signal	3 to 15 psig (21 to 103 kPa).
Action	Direct.
Supply air pressure	Clean, oil free, dry air required (reference EN-123).
Nominal	20 psig (138 kPa) through 0.0075 in. (190 μm) restrictor.
Minimum	18 psig (124 kPa).
Maximum	30 psig (207 kPa).
Air consumption for sizing air compressor	41.5 scim (11.3 mL/s). TKS-5001-600, 69.1 scim (18.9 mL/s).
Air capacity for sizing air mains	36 scim (13.2 mL/s). TKS-5001-600, 88 scim (24 mL/s).

Accessories

Model No.	Description
AT-201	Copper bulb well.
AT-203	Stainless steel bulb well.
AT-208	Duct mounting kit for TKS-40xx.
AT-211	Bulb shield for wall mounting TKS-2031.
AT-504	Plaster hole cover (small).
AT-505	Surface mounting base.
AT-506	Pneumatic wall box fitting (two tubes) used for mtg. AT-532-11-1-01 under cover of TKS-5001.
AT-509	Wall box required for TKS-5001-600.
AT-532-098-1-1	0.0075 restrictor (white).
AT-532-098-1-2	.005 in. restrictor (Red).
AT-532-098-1-3	.010 in. restrictor (Blue).
AT-532-111-1-01	0.0075 tee restrictor for 5/32 in. plastic tubing.
AT-532-111-1-03	.010 in. Tee restrictor. 5/32 in. tubing.
AT-532-222-2-01	.0075 in. Tee restrictor 1/4 in. tubing dual for TK-5000 Series.
AT-533-101	Adaptor 1/4 in. plastic to 5/32 in. plastic.
AT-533-127	Adaptor 3/16 in. copper or 1/4 in. copper with 1/4 in. solder coupling (not included) to 5/32 in. plastic.
AT-533-129	5/32 in. x 5/32 in. barbed brass connector.
TOOL-015	Spanner head driver for #6 spanner head screws.

Typical Applications

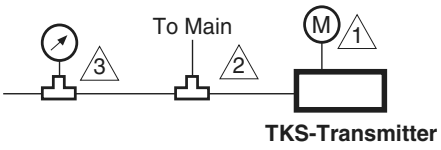

1. Required for TKS-5001-600 only (omit external restrictor).
2. Transmitter located less than 200 Ft. (61m) from restrictor.
3. Transmitter located less than 1000 Ft. (305m) from Receiver Gauge.

Figure 1 Typical Application.

Dial Thermometers

Dial thermometers for continuous visual indication of temperature in ducts, pipes, and tanks.

Features

- Chromed brass construction with unbreakable acrylic lens.
- May be mounted in any position, and case may be angled for optimum viewing.
- Two different ranges available to suit most HVAC applications.

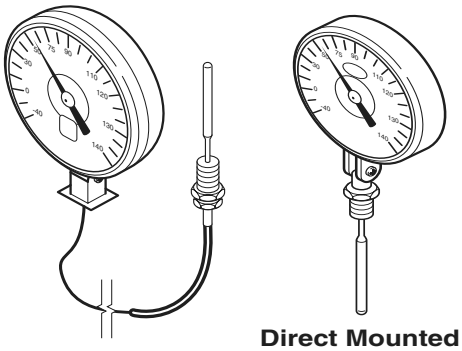

Remote Mounted

Direct Mounted

Model Chart

Model No.	Type	Scale Range[a] °F (°C)	Capillary Dimensions
TS-291	Direct Mounting	-40 to 140 (-40 to 60)	—
TS-292		30 to 240 (0 to 115)	—
TS-293	Remote Mounting	-40 to 140 (-40 to 60)	6 ft. (1.8 m)
TS-294		30 to 240 (0 to 115)	

[a] Scales dual marked in °F and °C.

Specifications

Construction	
Case	Chromed brass.
Lens	Crown type unbreakable acrylic.
Connection	Water tight 1/2 in. MNPT.
Mounting	In any position. Case can be rotated 150°.
Dimensions	
Bulb	3-3/4 x 7/16 in. (95 x 11 mm), 1-1/2 in. (38 mm) extension.
Dial	3-1/2 in. (89 mm).

Accessories

Model No.	Description
AT-219	Bulb well.

6-371 (20-642)
Mounting Ring

Application

2 X 2 Thermostat Installation Fittings, Accessories, Adaptors and Tools.

Description

Steel mounting ring for mounting thermostat to mounting head. Includes two #6 flat head screws.

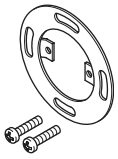

6-371

10-11 (20-693)
Tubing

Application

2 X 2 Thermostat Installation Fittings, Accessories, Adaptors and Tools.

Description

3/16 in. tygothane tubing assembly with spring. One tube with four eyelets, but no fittings.

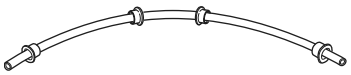

10-22
Mounting Box

Application

2 X 2 Thermostat Installation Fittings, Accessories, Adaptors and Tools.

Description

Plain deep mounting box 2-1/2 H x 1-7/8 W x 1-3/4 D in., 1/2 in. conduit knockout, for use with 3 x 3 in. thermostats only, or with 2 x 2 in. thermostats and 10-77 (or 10-78) plate.

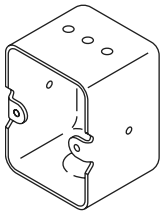

10-23 (20-699)
Gauge Adaptor

Application

2 X 2 Thermostat Installation Fittings, Accessories, Adaptors and Tools.

Description

Gauge tap adaptor, accepts any 1/8 in. MPT gauge or fitting and inserts into thermostat body of T21, T22 T26, or T31, 3 x 3 in. thermostats.

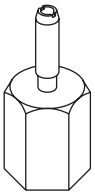

10-47 (20-757)
Mounting Plate

Application

2 X 2 Thermostat Installation Fittings, Accessories, Adaptors and Tools.

Description

Aluminum mounting plate for adapting T-Series controls to competitive mounting heads.

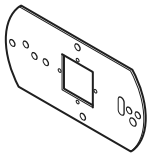

10-48 (20-758)
Wall Plate

Application

2 X 2 Thermostat Installation Fittings, Accessories, Adaptors and Tools.

Description

Lexan wall plate to cover 10-47. This plate will accept 2 x 2 in. or 3 x 3 in. devices.

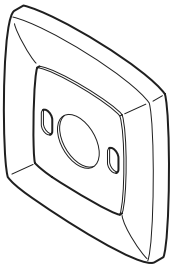

10-50 (20-705)
Wall Plate

Application

2 X 2 Thermostat Installation Fittings, Accessories, Adaptors and Tools.

Description

Satin-chrome enamel wall plate to cover existing mounting head when device is no longer required.

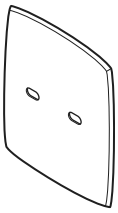

10-51 (20-706)
Gauge Adaptor

Application

2 X 2 Thermostat Installation Fittings, Accessories, Adaptors and Tools.

Description

Gauge tap adaptor for T15 or T16 only. One end accepts 1/8 in. MPT gage, other end screws into thermostat body.

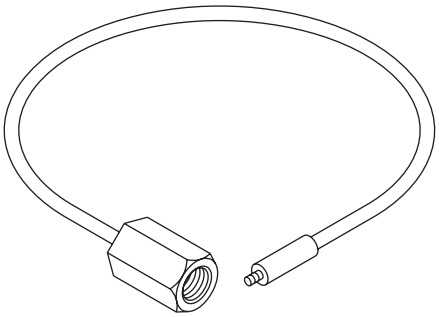

10-53 (20-707)

Thermostat Guard

Application

2 X 2 Thermostat Installation Fittings, Accessories, Adaptors and Tools.

Description

5-3/16 in. sq. cast metal guard. Will fit over 2 x 2 in. or 3 x 3 in. units.

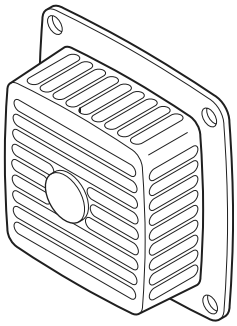

10-57 (20-710)

Mortar-joint Fitting

Application

2 X 2 Thermostat Installation Fittings, Accessories, Adaptors and Tools.

Description

Mortar-joint fitting with two 8 ft. (2.4 m) copper tubes for one or two pipe 2 x 2 in. thermostats. Tygon with eyelets shipped inside mounting head.

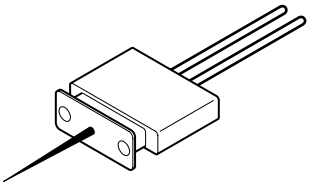

10-58 (20-711)

Mounting Ring

Application

2 X 2 Thermostat Installation Fittings, Accessories, Adaptors and Tools.

Description

Stamped metal mounting ring for use with 2 x 2 in. devices. Used with N5-52 for drywall mounting.

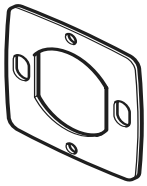

10-59 (20-712)

Stop Kit

Application

2 X 2 Thermostat Installation Fittings, Accessories, Adaptors and Tools.

Description

Stop kit for mounting on base of 2 x 2 in. devices only.

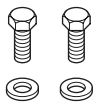

10-62 (20-715)

Thermostat Guard

Application

2 X 2 Thermostat Installation Fittings, Accessories, Adaptors and Tools.

Description

Molded Lexan guard for 2 x 2 in. devices. Clear front, satin-chrome enamel base.

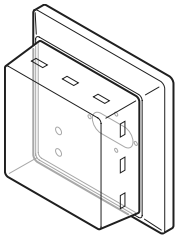

10-63 (20-716)

Back Plate

Application

2 X 2 Thermostat Installation Fittings, Accessories, Adaptors and Tools.

Description

Square insulating back plate for all 2 x 2 in. devices. Has four starter holes, 1/16 in. deep on back surface. 10-62 and 10-76 guards can be mounted on 10-63.

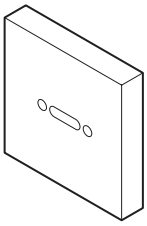

10-64

Tubing

Application

2 X 2 Thermostat Installation Fittings, Accessories, Adaptors and Tools.

Description

3/16 in. tygothane tubing assembly, with spring, two eyelets, and two barbed fittings for 1/4 in. plastic tubing.

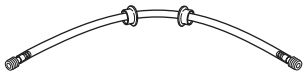

10-66 (21-468)

Mortar-joint Fitting

Application

2 X 2 Thermostat Installation Fittings, Accessories, Adaptors and Tools.

Description

Mortar-joint fitting with two 5/32 in. “FR” type tubes (8 ft. long) encased in an “FR” sheath for one or two pipe 2 x 2 in. thermostats. Tygon with eyelets shipped inside mounting head.

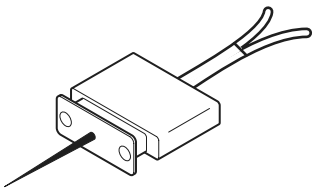

10-72 (21-800)

Adjustment Cover

Application

2 X 2 Thermostat Installation Fittings, Accessories, Adaptors and Tools.

Description

Concealed adjustment cover for use with metal 2 x 2 in. covers. (black)

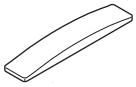

10-73 (21-473)

Snap-in Fitting

Application

2 X 2 Thermostat Installation Fittings, Accessories, Adaptors and Tools.

Description

Snap-in “labor-saving” fitting for mounting 2 x 2 in. thermostats, humidistats, and transmitters on drywalls having at least 3-1/2 in. studs.

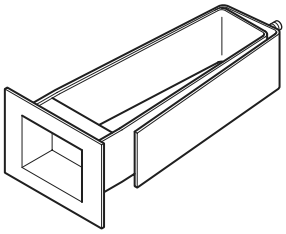

10-76 (21-876)

Thermostat Guard

Application

2 X 2 Thermostat Installation Fittings, Accessories, Adaptors and Tools.

Description

Molded ABS guard for 2 x 2 in. devices. Color: opaque gray.

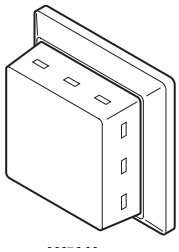

10-77 (20-714)

Adaptor Plates

Application

2 X 2 Thermostat Installation Fittings, Accessories, Adaptors and Tools.

Description

10-77: Adaptor plate (molded, black) used to mount 2 x 2 in. devices on 3 x 3 in. hardware. Covers larger hardware so it is not visible.

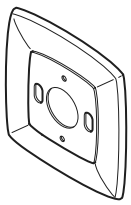

Application

2 X 2 Thermostat Installation Fittings, Accessories, Adaptors and Tools.

Description

Insulating back plate for all 2 x 2 in. devices. Has four starter holes, 1/16 in. deep on back surface. Guards cannot be mounted on 10-78.

10-78

Back Plate

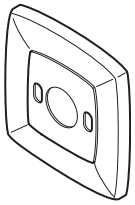

Application

2 X 2 Thermostat Installation Fittings, Accessories, Adaptors and Tools.

Description

10-80: Concealed adjustment cover for use with gray ABS cover. (gray)

10-81: Concealed adjustment cover for use with beige ABS cover. (beige)

10-80 (21-964), 10-81

Adjustment Cover

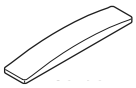

Application

2 X 2 Thermostat Installation Fittings, Accessories, Adaptors and Tools.

Description

10-82: Thermostat mounting plate provides 2 x 2 in. device mounting to a 2 x 4 in. vertical or horizontal outlet box. Includes two wing bolt screws. Color: black.

10-82-SS: Thermostat mounting plate provides 2 x 2 in. device mounting to a 2 x 4 in. vertical or horizontal outlet box. Includes two wing bolt screws. Color: stainless steel.

10-82-47: Thermostat mounting plate provides 2 x 2 in. device mounting to a 2 x 4 in. vertical or horizontal outlet box. Includes two wing bolt screws. Color: beige.

10-82-48: Thermostat mounting plate provides 2 x 2 in. device mounting to a 2 x 4 in. vertical or horizontal outlet box. Includes two wing bolt screws. Color: Euro-white.

10-82 (20-850), 10-82-SS, 10-82-47, 10-82-48

Mounting Plates

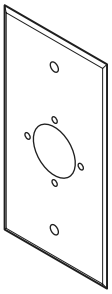

Application

2 X 2 Thermostat Installation Fittings, Accessories, Adaptors and Tools.

Description

Adaptor plate (beige) used to mount 2 x 2 in. devices on 3 x 3 in. hardware. Covers larger hardware so it is not visible.

20-720

Adaptor Plate

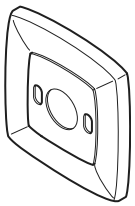

20-042
Mounting Plate

Application

2 X 2 Thermostat Installation Fittings, Accessories, Adaptors and Tools.

Description

Thermostat mounting plate for use with 10-77 (20-714) adaptor plate, where a wider plate than 10-58 (20-711) is needed. Replaces the 20-711 where a wider mounting plate is needed. Dimensions 3 x 1-7/8 in.

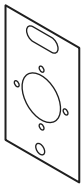

100-13 (20-777)
Sunshield

Application

Brass sunshield, cad plated, for T150 element.

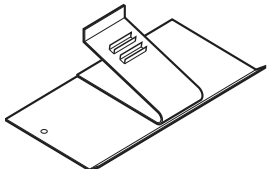

100-17 (20-778)
Copper Well

Application

Optional. T150 transmitter accessory.

Specifications

- 3/8 x 7-1/32 in. copper well with 1/2 in. NPT bushing.

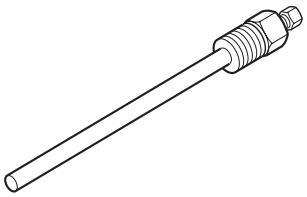

100-25(20-782)
Copper Well

Application

Standard. T150 transmitter accessory.

Specifications

- 3/8 x 10-17/32 in. copper well with 1/2 in. NPT bushing.

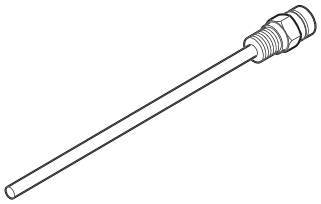

Application

Adapts existing female threaded wells (7/16 in. — 24) for T150 set screw mounting. T150 transmitter accessory.

Neck extension adaptor-converts 7-1/32 in. well to 10-17/32 in. well.

100-47 (20-803)

Adaptor

Application

T150 transmitter accessory.

100-49 (20-805)

Stainless Steel Well

Specifications

- 3/8 x 7-1/32 in. stainless steel well with 1/2 in. NPT bushing. Includes 100-47 (20-803).

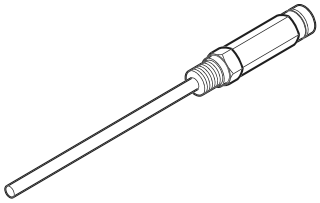

Transmitter Part Number	Standard Copper Well	Standard Stainless Steel Well	Extended Neck Copper Well	Extended Neck Stainless Steel Well
T150-1011	100-25	100-49	100-17 + 100-47	100-49
T150-1021				
T150-1031				
T150-1041				

Application

Adaptor, brass, for mounting T150 Immersion Transmitter in Barber-Colman AT-201 or AT-203 well.

100-71 (22-401)

Adaptor

Application

Pneumatic thermostat calibration kit for 2 x 2 Thermostats.

900-002
Calibration Kit

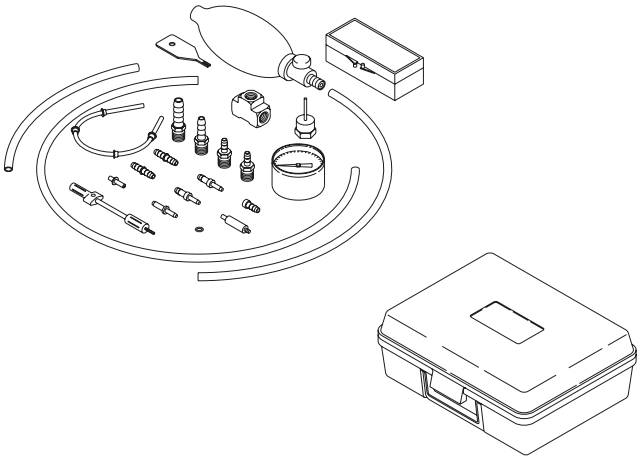

Application

Cover for RKS-1001 through 4002 and RKSR-4000.

AKS-4
Cover

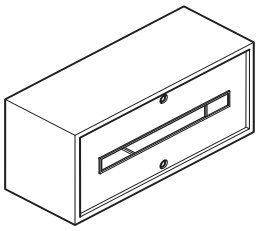

Application

Cover for RKS-5001. Used when mounting receiver-controller remote, from cabinet or locations where it is susceptible to damage.

AKS-5
Cover

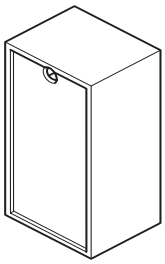

AM-132

Ball Joint Linkage Connector

Application

Ball joint linkage connector used for linking nonparallel shafts.

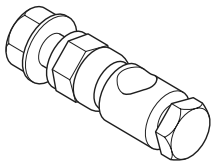

Specifications

- Cadmium plated connector with 5/16 in. (7.9 mm) diameter hole.

AM-530

Crank Arm

Application

Damper actuator linkage.

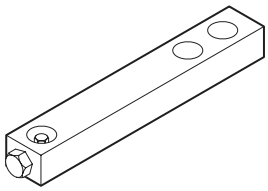

Specifications

- Construction: Hole for 1/2 in. (13 mm) dia. shaft, holes for 3-1/2 in. (89 mm) and 4-1/2 in. (114 mm) stroke.
- For use with actuators:
  - MK-31xx.
  - MK-71xx.

AM-532

Frame Mounting Kit

Application

Damper actuator linkage.

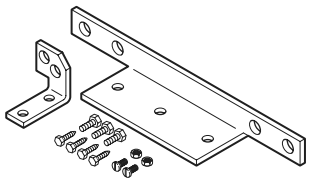

Specifications

- Construction: Bolt-on frame lug and blade clip.
- For use with actuators:
  - MK-71xx.
  - Pivot mounted MK-38xx.

AM-533, AM-543

Actuator Shaft Extension

Application

Damper actuator linkage.

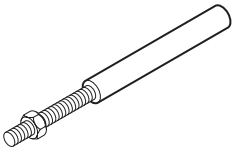

Specifications

- Construction: Shaft and lock nut 4-3/4 L x 5/8 in. (121 x 16 mm).
- AM-533 for use with actuators:
  - MK-3xxx.
  - MK-71xx-0-0-1 (discontinued).
- AM-543 for use with actuator MK-71x1-0-0-2.

AM-534
Pivot Stud

Application
Damper actuator linkage.

Specifications
- Construction: Stud with bolts and washers.
- For use with actuators:
  - MK-3xxx.
  - MK-71xx.

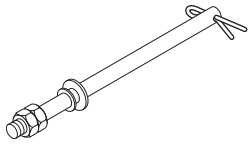

AM-535, AM-541
Clevis

Application
Damper actuator linkage.

Specifications
- Provided as standard with MK-71xx and MK-38xx; must be ordered to obtain pivot mounting of MK-31xx.

AM-535
- Construction: 24 UNC threaded hole for actuator shaft.
- For use with actuators:
  - MK-33xx.
  - MK-38xx.
  - MK-71xx-0-0-1 (discontinued).

AM-541
- Construction: 14 UNC threaded hole for actuator shaft.
- For use with actuators:
  - MK-71xx-0-0-2 (Current).
  - MK-7821-0-0-1.
  - MK-7921-0-0-1.

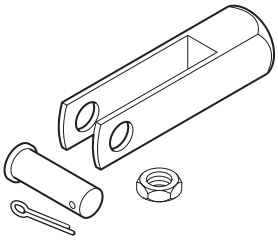

AM-536
Mounting Plates

Application
Damper actuator linkage.

Specifications
- Provided as standard with MK-71xx and MK-38xx; must be ordered to obtain pivot mounting of MK-31xx.
- For use with actuators:
  - MK-7000.
  - Pivot mounted MK-3000.

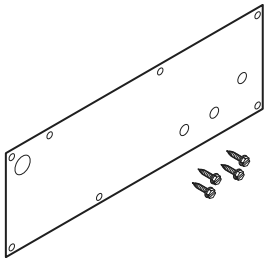

AM-538
Brace Kit

Application
Damper actuator linkage.

Specifications
- Construction: Threaded rod and connectors.
- For use with actuators:
  - MK-71xx.

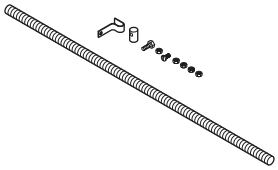

AM-542, AM-545
Rod End Connector

Application
Damper actuator linkage.

Specifications
- Construction: Hole for 5/16 in. (10 mm) dia. rods.
- AM-542 for use with actuator MK-71x1-0-0-2.
- AM-545 for use with actuator MK-3xxx.

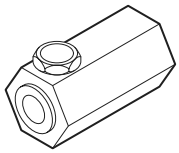

AP-302, AP-305
Pressure Sensing Tips

Application
Duct static pressure sensing tips.

Specifications
- Mounting hardware: Provided.

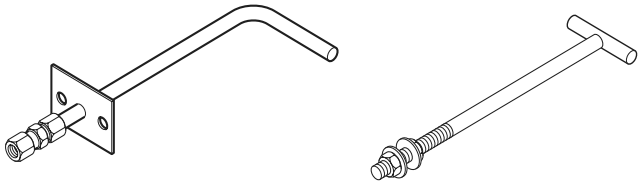

Model No.	Type of End Fitting	Construction	Mounting Location	Dimensions in. (mm)	For Use with
AP-302	1/4 in. for plastic or copper	Brass	Areas with air turbulence caused by filters, dampers, etc.	Insertion length 4 (102); 5 L x 2-1/2 W (127 x 64)	P323 Series, PC-301, PF-300 Series, PP-1012, PP-3013, PP-3113, PP-8121, PP-8516, PP-8616, PP-8621, PKS-323, R435, R436
AP-305	1/8 in. pipe thread	Brass with S.S. tee end	Very low actuating pressure	8-3/4 L x 2-1/2 W (222 x 64)	

AT-101
Lock Cover Screw Kit

Application
Lock cover screw kit modifies TK Series room thermostats to prevent unauthorized tampering of either the dial setting or the internal mechanism.

Specifications
- Two kits are required for duplex type thermostats.
- Used on all TK-1xxx and TK-5xxx except TK-17xx, TK-18xx.

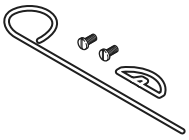

AT-104
Dial Stop Pins

Application
Package of 100 dial stop pins to insert in dial ends to limit the high or low setting of room thermostats.

Specifications
- Used on all TK-1xxx and TK-5xxx except TK-17xx, TK-18xx.

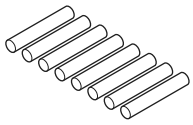

AT-201, AT-203, AT-206
Immersion Well

Application
Immersion well for use with 3/8 in. (10 mm) temperature bulbs.

Specifications
- Ambient temperature limits: -40 to 350°F (-40 to 177°C).

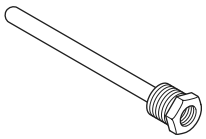

Model No.	Material	Dimensions				Application Limitations at 250°F (121°C) Fluid Temp.		Used With
		O.D. in. (mm)	Insertion Length in. (mm)	Overall Well Length in. (mm)	Fitting in.	Max. Recom. Velocity FPS (m/s)	Max. Recom. Static Pressure psig (kPa)	
AT-201[a]	Copper	1/2 (13)[b]	9-1/2 (241)	10-1/4 (260)	3/4 MNPT	11 (3.3)	250 (1728)	TK-6024, TK-6124
AT-203[a]	Stainless Steel	1/2 (13)[b]	9-1/2 (241)	10-1/2 (267)	3/4 MNPT	20 (6.1)	500 (3448)	
AT-206	Copper	1/2 (13)[b]	4-1/2 (114)	5-13/16 (148)	1/2 MNPT	11 (3.3)	250 (1728)	

[a] Requires AT-209 for TK-6024, TK-6124.
[b] For 3/8 in. (10 mm) diameter bulbs.

AT-208
Duct Mounting Kit

Application
Duct mounting kit for pneumatic temperature bulbs.

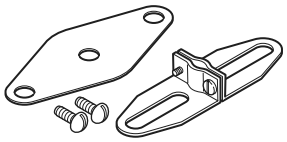

AT-209

Liquid Line or Tank Mounting Kit

Application

3/4 in. MNPT liquid line or tank mounting kit for TK-6024 or TK-6124 Series bulb thermostats. Bulb well is recommended.

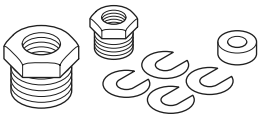

AT-219

Bulb Well

Application

Bulb well for TS-29x Series dial thermometers in immersion applications where removal of sensing element without draining the system is necessary.

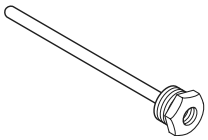

Specifications

- Construction: Brass.
- Connection: 1/2 in. MNPT.
- Dimensions: 9/16 Dia. x 6-1/2 L in. (14 x 159 mm).

AT-504

Mounting Base Single

Application

Single room type electric or pneumatic thermostats, sensing elements and electronic controllers or sensing elements. Used to cover a rough plaster hole in the wall. Use with AT-505 sub-base for surface mounting applications.

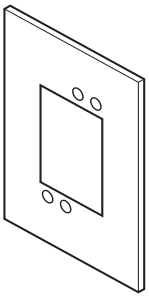

Specifications

- Color: Beige
- Dimensions: 5-7/16 H x 3-7/8 W x 3/8 D in. (138 x 98 x 16 mm).

AT-505

Mounting Base Single

Application

Surface mounting of single room type electric or pneumatic thermostats, sensing elements and electronic controllers or sensing elements. Can be used over AT-504 to facilitate installations where there is no wall box.

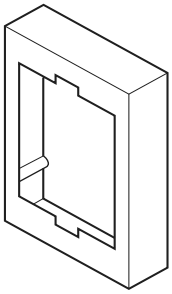

Specifications

- For surface mounting, screws field supplied.
- Color: Beige.
- Dimensions: 4-5/8 H x 3-1/8 W x 1 D in. (117 x 79 x 25 mm).

AT-546
Mounting Base Dual

Application
Two single wall type thermostats, controllers or sensing elements for dual function control. Can be installed on a horizontally mounted switch box by mounting an AT-504 on the AT-546.

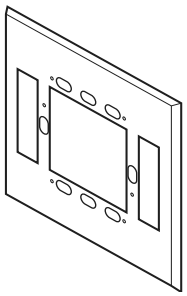

Specifications
- Color: Beige painted.
- Dimensions: 6-1/4 H x 6-1/4 W x 1/4 D in. (159 x 159 x 6 mm).

AT-1103, AT-1163
Thermostat Guard

Application
Room thermostat guards protect thermostats from damage and vandalism.

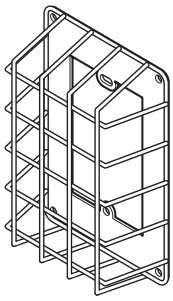

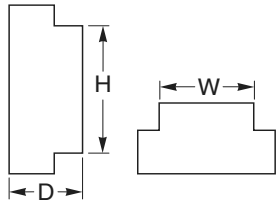

Side View End View

Specifications
- Construction: Wire guard with steel base plate.
- Mounting: To standard outlet or directly to the wall.
- Guard/Thermostat combinations:
  - HKS-5033.
  - TK-1xxx.
  - TK-5xxx.
  - TKR-1xxx.
  - TKR-5xxx.
  - TKS-5001.
  - AT-1163 will accept two single thermostats on an AT-546 auxiliary mounting base.
- Dimensions:
  - AT-1103: 4-1/4 H x 2-5/8 W x 1-5/8 D in. (108 x 67 x 41 mm).
  - AT-1163: 6-1/2 H x 6-5/8 W x 3-1/4 D in. (165 x 168 x 83 mm).

AT-1104
Thermostat Guard

Application
Room thermostat guards protect thermostats from damage and vandalism.

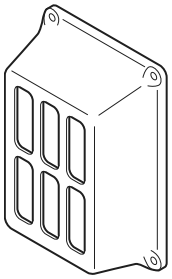

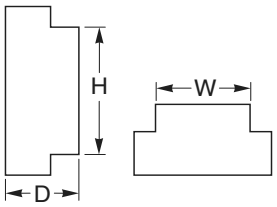

Side View End View

Specifications
- Construction: Cast aluminum guard with steel base plate.
- Mounting: To standard outlet or directly to the wall.
- Guard/Thermostat combinations:
  - HKS-5033.
  - TK-1xxx.
  - TK-5xxx.
  - TKR-1xxx.
  - TKR-5xxx.
  - TKS-5001.
- Dimensions: 4-1/4 H x 3-1/8 W x 1-5/8 D in. (108 x 70 x 41 mm).

AT-1105

Thermostat Guard

Application

Room thermostat guard protects thermostats from damage and vandalism.

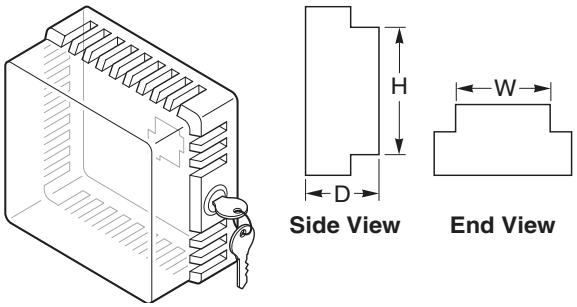

Specifications

- Construction: Clear plastic guard with solid base and tumbler type key lock.
- Mounting: To standard outlet or directly to the wall.
- Guard/Thermostat combinations:
  - HKS-5033.
  - TK-1xxx.
  - TK-5xxx.
  - TKR-1xxx.
  - TKR-5xxx.
  - TKS-5001.
  - Any 2 x 2 wall mounted device.
- Dimensions: 3-7/8 H x 3-1/2 W x 2-1/2 D in. (98 x 89 x 63 mm).

AT-1155

Thermostat Guard

Application

Room thermostat guard protects thermostats from damage and vandalism.

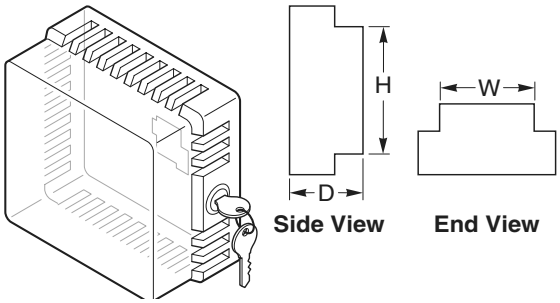

Specifications

- Construction: Clear plastic guard with solid and ring base, tumbler type key lock.
- Mounting: To standard outlet or directly to the wall.
- Included: Mounting ring for installation over installed thermostats without their removal from the wall.
- Guard/Thermostat combinations:
  - HKS-5033.
  - TK-1xxx.
  - TK-5xxx.
  - TKR-1xxx.
  - TKR-5xxx.
  - TKS-5001.
  - Any 2 x 2 wall mounted device.
- Dimensions: 5-1/4 H x 4-5/8 W x 3 D in. (133 x 117 x 76 mm).

AT-1165

Thermostat Guard

Application

Room thermostat guard protects thermostats from damage and vandalism.

Specifications

- Construction: Clear plastic guard with solid and ring base, tumbler type key lock.
- Mounting: To standard outlet or directly to the wall.
- Included: Mounting ring for installation over installed thermostats without their removal from the wall.
- Guard/Thermostat combinations:
  - HKS-5033.
  - TK-1xxx.
  - TK-5xxx.
  - TKR-1xxx.
  - TKR-5xxx.
  - TKS-5001.
  - Any 2 x 2 wall mounted device.
- Dimensions: 8 H x 5-1/2 W x 3-1/2 D in. (203 x 140 x 89 mm).

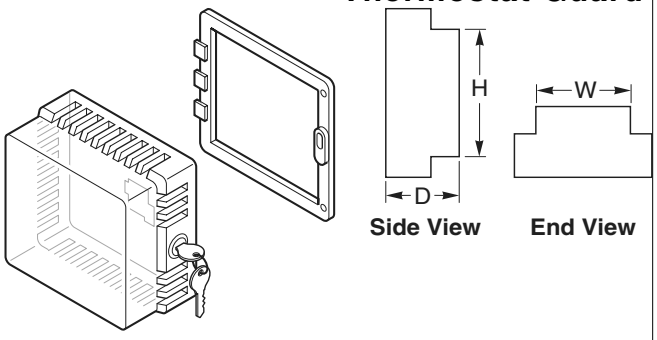

MCS-GA (22-138)

Gauge Adaptor

Application

2 X 2 Thermostat Installation Fittings, Accessories, Adaptors and Tools.

Description

Gauge adaptor for 2 x 2 thermostats, H18, H53, T53 and TAC PNEUMODULAR® MCS-CT and MCS-CV.

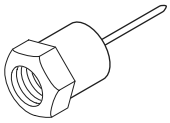

N1-51, N1-52, N1-53 (21-238, 21-239)

Differential Pressure Pick-ups

Application

Used with variable air controllers. Available in three sizes.

Description

N1-51 — 3 inches.
N1-52 — 6 inches.
N1-53 — 9 inches.

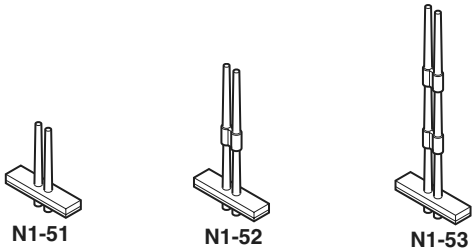

N2-4 (20-881)

Calibration and Cover-screw Wrench

Application

2 X 2 Thermostat Calibration Tool.

Description

1/16 in. and 1/4 in. hex head thermostat calibration and cover-screw wrench. (Also adjusts P541 Series Receiver-Controllers and older (3 x 3 in.) Robertshaw thermostats.)

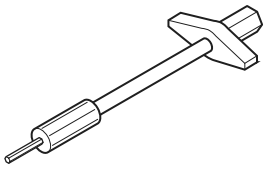

N4-32 (20-944)

Restrictor

Application

2 X 2 Thermostat Installation Fittings, Accessories, Adaptors and Tools.

Description

1.0 scfh restrictor (1/4 in. O.D. compression) for use on 1/4 in. O.D. copper tubing or can be used on polythylene with insert.

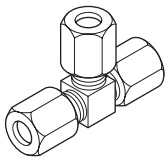

N5-49 (21-065)

Installation Adaptor

Application

2 X 2 Thermostat Installation Fittings, Accessories, Adaptors and Tools.

Description

3 in. installation adaptor. Use with N5-53 for dry wall or plaster.

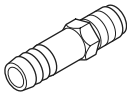

N5-52 (21-068)

Mounting Bracket

Application

2 X 2 Thermostat Installation Fittings, Accessories, Adaptors and Tools.

Description

Mounting bracket (for use in mounting thermostats). For installation on dry wall construction. Used with 10-58 for drywall mounting.

N5-53 (21-069)

Mounting Plate

Application

2 X 2 Thermostat Installation Fittings, Accessories, Adaptors and Tools.

Description

Mounting plate for thermostats. Use for dry wall construction. (To be roughed in prior to installation of dry wall.)

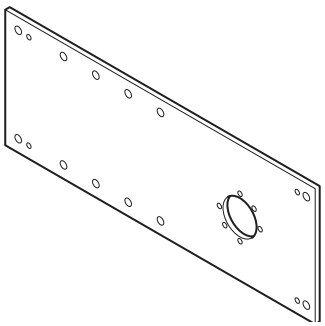

N5-95 (22-022)
Thermostat Conversion Kit

This thermostat conversion kit was designed and packaged with the serviceman in mind. It allows a quick and easy replacement of competitive devices with a new T1x, T2x, or T3x (2 x 2 in.) pneumatic thermostat.

Features:

- Direct replacement of most old or obsolete thermostats.
- Allows replacement without have to remove the old pipe head.
- Wallplate skirt covers marks made by old thermostat.

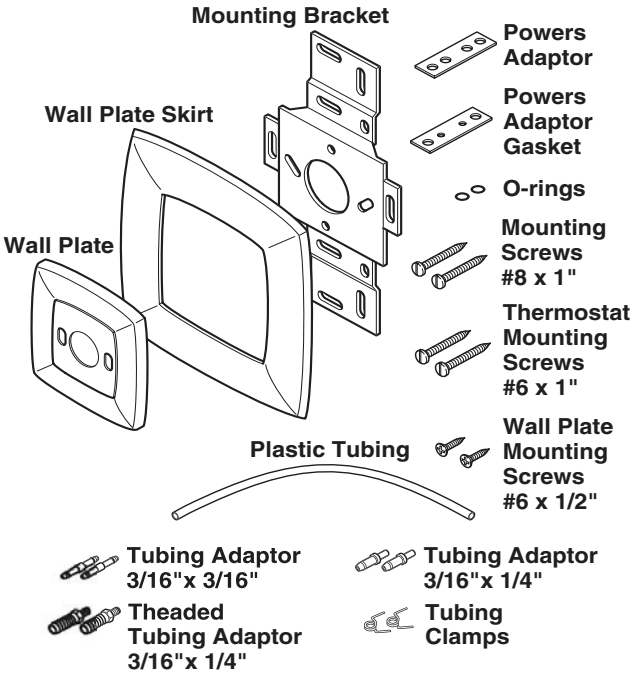

Model Chart

Model No.	Wholesale Model No.	Kit Contains	
		Quantity	Description
N5-95	22-022	1	Wall plate
		1	Wall plate skirt
		1	Mounting bracket
		2	Tubing adaptor 3/16 x 3/16 in.
		2	Tubing adaptor 3/16 x 1/4 in.
		2	3/16 in. tubing x 1/4 in. threaded adaptor
		2	O-ring
		1	Powers adaptor gasket
		1	Powers adaptor
		2	Mounting screw no. 8 x 1 in.
		2	Wall plate mounting screws no. 6 x 1/2 in.
		2	Thermostat mounting screws no. 6 x 1 in.
		2	Tubing clamps
		1	1/4 in. O.D. plastic tubing

Application

2 X 2 Thermostat Installation Restrictor, Restrictor Tees, and Thermostat Calibration Kit.

Description

0.5 scfh restrictor tee. Color: light green. **Note:** This restrictor should be used only (a) when the 100-50 (RA) or 100-51 (DA) temperature sensors are used separately, or (b) for special applications requiring low air flow.

N100-0005 (21-039)

Restrictor Tee

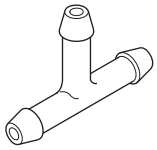

Application

2 X 2 Thermostat Installation Restrictor, Restrictor Tees, and Thermostat Calibration Kit.

Description

1.0 scfh restrictor tee for use with one-pipe thermostats or transmitters (1/4 in. polythylene or polyurethane tubing). Color: red.

N100-0010 (21-038)

Restrictor Tee

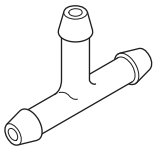

Application

2 X 2 Thermostat Installation Restrictor, Restrictor Tees, and Thermostat Calibration Kit.

Description

1.0 scfh in-line restrictor.

N100-2501 (21-153)

In-line Restrictor

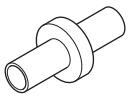

N800 Series
Damper Actuator Accessories for M556, M572, M574, M583, M584

Illustration	Model No.	Wholesale Model No.	Description	For Use With:
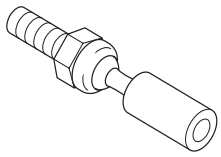	N800-0801	—	Ball-joint	—
	N800-1301	—	Hex coupling 1/4-20	1/4 in. -20 pushrods
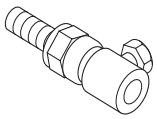	N800-0803	—	Ball-joint/swivel 1/4-20 male x 5/16 in. dia. female. (Receives 5/16 in. push rod.)	—
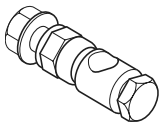	N800-0804	21-807	Ball-joint/swivel 5/16 in. dia. cross hole x 5/16-24 top screw x 1/4-20 male with nut and lockwasher	Crank arms and 5/16 in. pushrod.
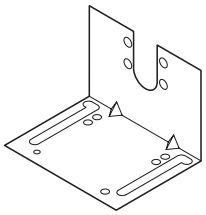	N800-0901	—	Right angle bracket	M573 actuator
	N800-0902	—		M574 actuator
	N800-0903	—		M572 actuator
—	N800-0904	—	Mounting post	M574 & M583 actuators
—	N800-0905	—	Offset mounting bracket	M573 actuator
—	N800-1007	—	Stamped clevis for 1/4 in. clevis pin (Mounts with N800-1809 bolt)	—
—	N800-1100	—	Clevis pin	—
—	N800-1102	—	Clevis pin	—
—	N800-1105	—	Nylon bushing	M693 actuator
—	N800-1151	—	5/16 in. I.D.shaft collar	M572 actuator
—	N800-1153	—	7/16 in. I.D.shaft collar	M573, M574, M583 & M584 actuators
	N800-1205	—	Hair-pin (cotter)	Clevis pins

N800 Series
Damper Actuator Accessories for M556, M572, M574, M583, M584

Illustration	Model No.	Wholesale Model No.	Description	For Use With:
—	N800-1206	—	Lock pin	—
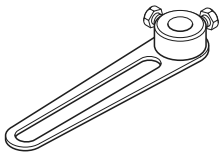	N800-1403	—	Slotted crank arm - 3/8 in. shaft	—
	N800-1404	—	Slotted crank arm - 1/2 in. shaft	—
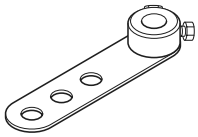	N800-1414	—	Crank arm for 3/8 in. O.D. extended shaft	M556, M572, M573, M574 actuators
	N800-1415	21-806	Crank arm for 1/2 in. O.D. extended shaft	
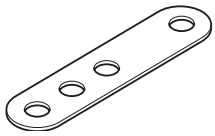	N800-1501	—	Feedback arm used with the N800-0555-Box	M573, M574 and M556 actuators.
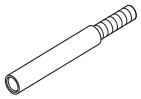	N800-1601	—	2 in. push rod - 1/4-20 male x 1/4-20 female	—
—	N800-1602	—	1 in. push rod - 1/4-20 fully threaded stud	—
—	N800-1604	—	Push rod - 1/4 dia. x 4-1/2 in. L	—
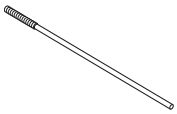	N800-1607	—	Push rod - 1/4 dia. x 7-1/2 in. L	—
	N800-1614	—	Push rod -14 in. L	—
	N800-1615	—	Push rod - 1/4 dia. x 15 in. L	—
	N800-1629	—	Push rod - 1/4 dia. x 31-1/2 in. L	—
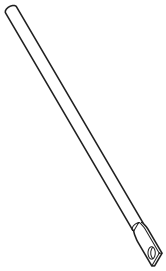	N800-1612	—	Eye rod - 6 in. L	M693-3095 693-8095 M695-5095 actuator Used with N800-1414 or N800-1415
—	N800-1621	—	Push rod - 1/4 dia. x 13 in. L	—
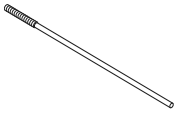	N800-1629	—	Push rod - 31-1/2 in. L	—

N800 Series Damper Actuator Accessories for M556, M572, M574, M583, M584

Illustration	Model No.	Wholesale Model No.	Description	For Use With:
	N800-1630	21-810	Push rod - 5/16 dia. x 6-1/4 in. L	M572 actuator
—	N800-1635	—	Push rod - 1/4 dia. x 10 in. L; bent 18°	—
	N800-1651	—	Pre-assembled linkage for use with 1/2 in. O.D. extended damper shafts. 90° rotation. Maximum torque is 23 in.-lbs.	M693 actuator only.
	N800-1805	—	1/2 in. L 10-32 self-tapping mounting screw	M572 actuator
	N800-1809	—	1/2 in. L 1/4-20 mounting machine screw	M573 and M574 actuators
—	N800-1882	—	Actuator stroke limiting screw 3 in. L	—
—	N800-1884	—	Actuator stroke limiting screw 3-1/2 in. L	—
—	N800-1920	—	Hex nut, 1/2 in. -13, UNC-2B (Use (2) with N800-0904 mtg. post)	—
—	N800-2101	—	1/2 in ID lockwasher (Use (2) with N800-0904 mtg. post)	—
—	N800-2102	—	1/4 in ID flat plated steel washer (Use (2) with N800-0904 mtg. post)	—
—	N800-2160	—	1/2 in. ID flat plated steel washer (Use (2) with N800-0904 mtg. post)	—
—	N800-2200	—	Retaining ring (Use (2) with N800-0904 mtg. post)	—
—	N800-2257	—	Positive positioner feedback spring 5 psi for 3 in. actuator	M573 actuator
—	N800-2258	—	Positive positioner feedback spring 5 psi for 4 in. actuator	M574 actuator
—	N800-2259	—	Positive positioner feedback spring 5 psi for 6 in. actuator	M556 actuator
—	N800-2267	—	Positive positioner feedback spring 10 psi for 3 in. actuator	M573 actuator
—	N800-2268	—	Positive positioner feedback spring 10 psi for 4 in. actuator	M574 actuator
—	N800-2269	—	Positive positioner feedback spring 10 psi for 6 in. actuator	M556 actuator
—	N800-2277	—	Positive positioner feedback spring 3 psi for 3 in. actuator	M573 actuator
—	N800-2278	—	Positive positioner feedback spring 3 psi for 4 in. actuator	M574 actuator
—	N800-2279	—	Positive positioner feedback spring 3 psi for 6 in. actuator	M556 actuator
—	N800-4202	—	3-12 psi spring	M572 actuator

N800 Series
Damper Actuator Accessories for M556, M572, M574, M583, M584

Illustration	Model No.	Wholesale Model No.	Description	For Use With:
—	N800-4203	—	5-10 psi spring	M572 actuator
—	N800-4205	—	8-13 psi spring	M572 actuator
—	N800-4206	—	10-15 psi spring	M572 actuator
—	N800-4208	—	4-8 psi spring	M572 actuator
—	N800-4302	—	3-12 psi spring	M573 actuator
—	N800-4303	—	5-10 psi spring	M573 actuator
—	N800-4305	—	8-13 psi spring	M573 actuator
—	N800-4306	—	10-15 psi spring	M573 actuator
—	N800-4308	—	4-8 psi spring	M573 actuator
—	N800-4402	—	3-12 psi spring	M574 actuator
—	N800-4405	—	8-13 psi spring	M574 actuator
—	N800-4408	—	4-8 psi spring	M574 actuator
—	N800-9422	—	Diaphragm	M572 actuators
—	N800-9423	—	Diaphragm	M573 actuators
—	N800-9424	—	Diaphragm	M574 actuators
—	N800-9426	—	Diaphragm	M556 actuators
—	—	2850-058	Mounting hardware (kit) for all 3 in. and 4 in. post-mounted actuators.	—

TAC PNEUMODULAR® Accessories

Illustration	Model No.	Wholesale Model No.	Description
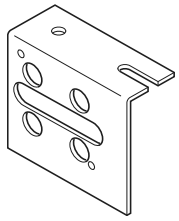	K502	22-150	Mounting bracket for all TAC PNEUMODULAR relays except R503 and R504 series TAC PNEUMODULAR diverting relays.
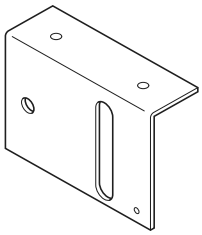	K503	22-151	Mounting bracket for R503 and R504 series TAC PNEUMODULAR diverting relays.
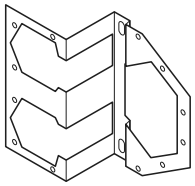	K504	22-152	Mounting bracket for P541 series TAC PNEUMODULAR receiver controllers and up to three gauges (using gauge mounting fittings or gauge mounting tees).
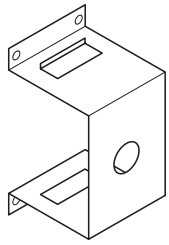	K511	22-155	Mounting bracket for one TAC PNEUMODULAR gradual or selector switch.
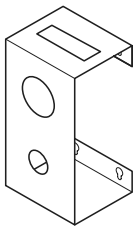	K512	22-156	Mounting bracket for one TAC PNEUMODULAR gradual or selector switch and one 2 in. flush-mounting gauge.
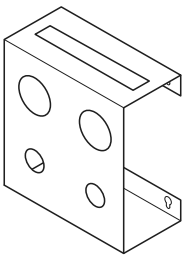	K514	22-157	Mounting bracket for two TAC PNEUMODULAR gradual or selector switch and two 2 in. flush-mounting gauges.

Illustration	Model No.	Wholesale Model No.	Description
TAC PNEUMODULAR CONTROL SYSTEM	LABL-1	—	Adhesive label for TAC PNEUMODULAR panels, red letters on beige background, 4-3/4 x 1-1/2 in., 100 per roll.
TAC PNEUMODULAR CONTROL SYSTEM	LABL-2	—	Adhesive label for TAC PNEUMODULAR panels, red letters on beige background, 3-7/8 x 1-1/2 in., 100 per roll.
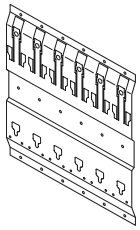	MCS-BP1 [a]	22-101	10 x 2 in. one place backplate, aluminum.
	MCS-BP4 [a]	22-104	10 x 8 in. four place backplate, aluminum.
	MCS-BP6 [a]	22-106	10 x 12 in. six place backplate, aluminum.
	MCS-BP10 [a]	22-110	10 x 20 in. ten place backplate, aluminum.
	MCS-BP12 [a]	22-112	10 x 24 in. twelve place backplate, aluminum.
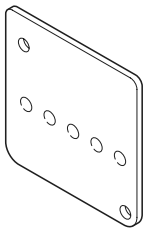	MCS-CP	22-144	Cover plate for an unused MCS-S socket.
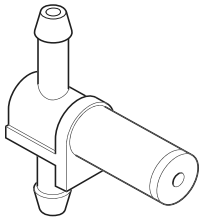	MCS-CT	22-143	Check valve tee. Mounts on upper end of MCS-S socket; permits connection to field-mounted devices.
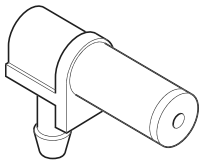	MCS-CV	22-137	Check valve. Mounts on upper end of MCS-S socket.
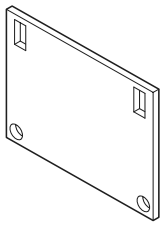	MCS-EB	22-136	Electrical barrier. Covers wiring terminals of MCS-EC.
	—	2890-536	Package of 10 MCS-EB.

a Includes necessary mounting screws.

TAC PNEUMODULAR Accessories

Illustration	Model No.	Wholesale Model No.	Description
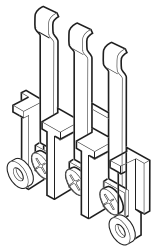	MCS-EC	22-122	Electrical connector. Slip-locks into lower end of MCS-S socket.
	—	2890-522	Package of 10 MCS-EC.
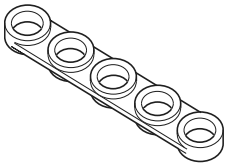	MCS-G	22-133	Neoprene sealing gasket used when mounting devices on MCS-S.
	—	2890-533	Neoprene sealing gasket quantity package (25).
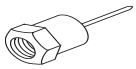	MCS-GA	22-138	Gauge adaptor, 1/8 in.-27 fpt threads for adapting standard pressure gauges for insertion into MCS-CV check valve and MCS-CT check valve tee. Also for all 2 x 2 room thermostats, humidistat, and transmitters.
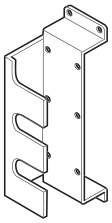	MCS-GM	22-121	Gauge module allows internal panel mounting of three pressure and/or receiver gauges; use with MCS-GMF gauge-mounting fittings (one for each gauge).
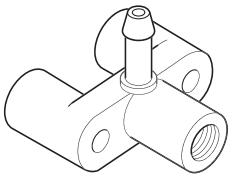	MCS-GMF	22-139	Drop-eared gauge mounting fitting, receives 1/8 in. NPT stem-mounted gauge. Has one barbed fitting. Used with MCS-GM.
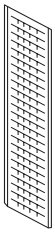	MCS-LABEL	22-132	Card of socket labels (24 per card).
	MCS-MS	22-135	#6-1/4 in. mounting screw for mounting MCS-GM to backplate, included with MCS-GM.
	—	2890-535	#6-1/4 in. mounting screw quantity package (100).

Illustration	Model No.	Wholesale Model No.	Description
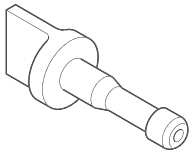	MCS-PLUG	22-140	Sealing plug for sealing unused connections of MCS-S socket. (Connections of unused vertical rows need not be plugged).
	—	2890-540	Package of 250 MCS-PLUG.
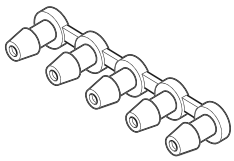	MCS-PS	22-130	Replacement plug strip for top access holes in MCS-S (has five barbed plugs). (Included as part of MCS-S) socket.
	—	2890-530	Package of 20 MCS-PS.
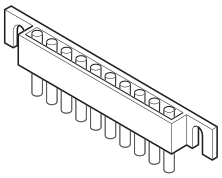	MCS-PTS	22-142	Pneumatic terminal strip, has 10 connections. Use MCS-TUBE to connect to TAC PNEUMODULAR components, and 1/4” O.D. tubing to make connections to field-mounted devices.
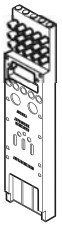	MCS-S	22-120	MCS-S includes socket with MCS-PS Installed. Package of 20 MCS-S. Socket assembly
	—	2890-520	Package of 20 MCS-S. Socket assembly **Note:** Use only MCS-TUBE on MCS-S tubing connections.
	MCS-S-P	—	MCS-S-P includes: One MCS-PS One MCS-G Four MCS-SCREW Fifteen MCS-PLUG
	MCS-SC	—	Neoprene sealing cap for closing poly-tube air lines. Use with 1/4” barbed coupling.
	MCS-SCREW	22-134	#6-1/2 in. double Plastite® mounting screw; mounts TAC PNEUMODULAR devices to MCS-S socket.
	—	2890-534	#6-1/2 in. double plastite mounting screw quantity package (100).
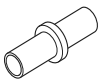	MCS-TC	22-141	Tubing connector for connecting 1/4 in. plastic tubing to top of MCS-S socket. **Note:** Use only MCS-TUBE with MCS-TC.
	—	2890-541	Package of 50 MCS-TC.
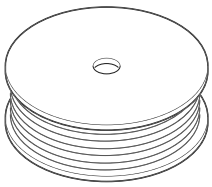	MCS-TUBE	2803-500	500 ft. roll of 9/32 in. O.D. polyurethane tubing for use with MCS-S. **Note:** All connections to TAC PNEUMODULAR MCS-S socket must be made with MCS-TUBE. Do not attempt to use any other tubing.
	—	2803-100	100 ft. roll of 9/32 in. O.D. polyurethane tubing for use with MCS-S.

TAC PNEUMODULAR Accessories

Illustration	Model No.	Wholesale Model No.	Description
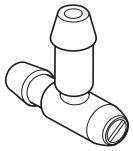	N4-150	22-145	Restrictor - adjustable needle valve for MCS-TUBE only. Has two barbed fittings.
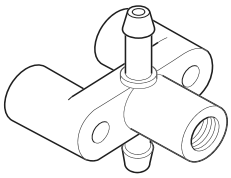	N100-2366	—	Drop eared gauge mounting tee.
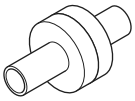	N100-2500	21-152	Inline check valve will operate on 1/4 psi differential. **Note:** Body is marked IN and OUT.
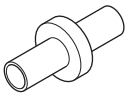	N100-2501	21-153	In-line restrictor, 1 scfh. (0.0063 in. Dia. restrictor) for use with NCS-TUBE or 1/4 in. poly tube.
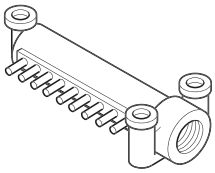	N100-2502	21-721	Main air header 3/8 in. fpt input port and nine output ports for MCS-TUBE tubing.

2890-500 TAC PNEUMODULAR Parts Kit

Wholesale Model No.	Description
22-122	Electrical contact assembly.
22-130	Plug strip.
22-140	Sealing plug.
22-133	Neoprene sealing gasket.
22-134	#6-1/2” double plastite mounting screw.
22-135	#6-1/4” mounting screw for mounting MCS-GM to backplate.
22-136	Electrical barrier.
22-137	Check valve assembly.
22-138	Gauge adaptor, 1/8” fpt threads for adapting standard pressure gauges for insertion into MCS-CV.
22-139	Drop-eared gauge mounting fitting.
22-141	Tubing connector for connecting 1/4” plastic tubing.

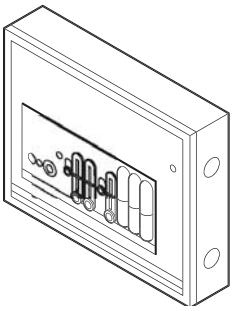

Description.[a]

Model No.		Wholesale Model No.	Dimensions in. (cm) H x W x D	Description
Barber-Colman Logo	Robertshaw Logo			
—	PCP-12BD	22-180	21 x 30 x 7 (53 x 76 x 18)	Solid door, left or right hinged 12-place
PCP-12WL-BC	PCP-12WL	22-181		Window door, left hinged 12-place
—	PCP-6BD	22-183	21 x 18 x 7 (53 x 46 x 18)	Solid door, left or right hinged 6-place
PCP-6WL-BC	PCP-6WL	22-184		Window door, left hinged 6-place

[a] For detailed assembly directions, refer to the TAC PNEUMODULAR® Panel General Instructions.

Parts Required to Field Assemble a Specific TAC PNEUMODULAR® Panel.

Part No.	Wholesale Part No.	PCP-6BD	PCP-6WL	PCP-12BD	PCP-12WL
RNG-6	—	X	X		
RNG-12	—			X	X
DOOR-6B	—	X			
DOOR-6WL	—		X		
DOOR-12B	—			X	
DOOR-12WL	—				X
BEZ-6	—	X	X		
BEZ-12	—			X	X
PLEX-6	22-196		X		
PLEX-12	22-195				X
N100-9915	21-617	X	X	X	X

Specifications

Construction	16 gage steel throughout. Doors have spring loaded pivot hinge and key-operated latch to prevent tampering.
Finish	Brown baked semi-gloss enamel.
Mounting	Surface or free standing using available panel stand.
Knockouts	Provided on four sides of cabinet.

TAC PNEUMODULAR Accessories

Illustration	Model No.	Wholesale Model No.	Description
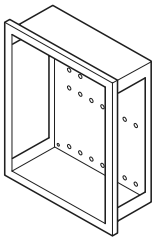	BEZ-6	—	Bezel and backplate assembly, 6-place panel. (Shown)
	BEZ-12	—	Bezel and backplate assembly, 12-place panel.
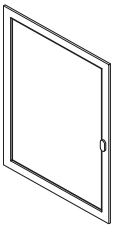	DOOR-6B	—	Blank door, left or right hinged, 6-place panel.
	DOOR-12B	—	Blank door, left or right hinged, 12-place panel.
	DOOR-6WL	—	Door with cutout for PLEX-6 window, left hinged.
	DOOR-12WL	—	Door with cutout for PLEX-12 window, left hinged.
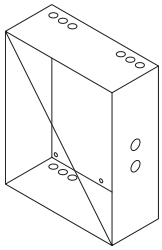	RNG-6	—	Ring, 6-place TAC PNEUMODULAR panel.
	RNG-12	—	Ring, 12-place TAC PNEUMODULAR panel.
	N100-9915	21-617	Lock and key assembly, for panels.
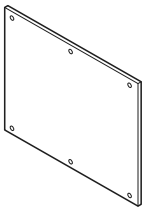	PLEX-6	22-196	Plexiglass window, 6-place panel (shown).
	PLEX-12	22-195	Plexiglass window, 12-place panel.

Illustration	Model No.	Description
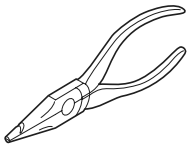	TOOL-074	Insertion tool — 5/32 in. plastic tube.
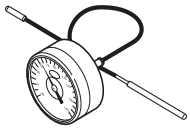	TOOL-076	Adaptor-branch line and test gauge for TK-5xxx and TKR-5xxx type pneumatic room thermostat. Also included in TOOL-096.
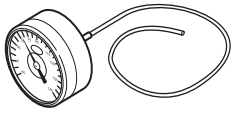	TOOL-077	Adaptor-test gauge to branch line for TK-2xxx, TK-3xxx, and TK-4xxx type pneumatic bulb thermostat. Can be used with TOOL-087. Also included in TOOL-096.
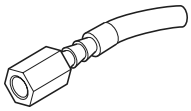	TOOL-078	Adaptor for test gauge TOOL-077 to branch test port for HK-1x12, TK-1xxx, T K-6xxx, TK-8xxx, TK-9xxx, and TK-1xxxx type pneumatic thermostat. Also included in TOOL-095-1 and TOOL-096.
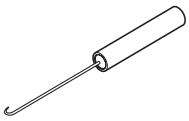	TOOL-079	Spring hook to disconnect springs on TK Series pneumatic thermostats.
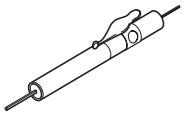	TOOL-082	Pocket wrench with 5/64 in. Allen wrench for branch test port on TK Series pneumatic thermostats and locking cover screws and 0.048 in. 6-spline wrench for thermostat clalibration.
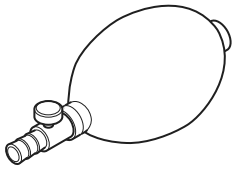	TOOL-085	Manual hand pump bulb for pumping up actuators to check linkage. Also included in TOOL-095-1.
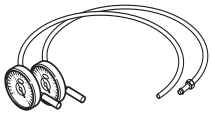	TOOL-086	Gauges and tubing for adapting TOOL-085 to both barbed and compression fittings.
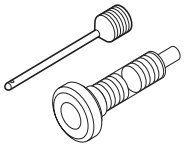	TOOL-087	Needle and adaptor for use with 1/4 in. plastic tubing for TK Series thermostats.
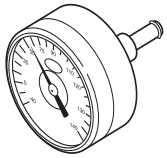	TOOL-090	Branch test adaptor with gauge for Johnson thermostats.

Illustration	Model No.	Description
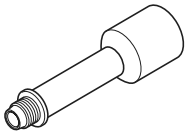	TOOL-091	Branch test adaptor without gauge for Johnson thermostats. Also included in TOOL-090.
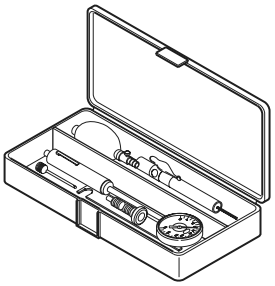	TOOL-095-1	Pneumatic calibration tool kit. Calibrates all TAC pneumatic equipment. Kit includes: • MCS-GA, gauge adaptor. • N2-4, 2 x 2, 1/16 in. hexhead thermostat calibration cover screw wrench. • Female branch tee (1/4 barb x 1/4 barb x 1/8 in. FPT). • TOOL-011: calibration wrench. • TOOL-078: adaptor. • TOOL-080-1: changeover wrench. • TOOL-082: combination wrench. • TOOL-083: thermostat calibration wrench. • TOOL-085: hand pump bulb. • TOOL-087: needle and adaptor. • TOOL-110: 3/32 in. hex wrench. • AL-362: 0 to 30 psi gauge. • Air line tubing for barbed fitting. • Air line tubing with compression fitting. • 3/16 x 4 in. blade screwdriver.
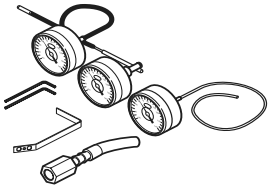	TOOL-096	Pneumatic thermostat calibration kit, for TK-Series thermostats. Kit includes: • TOOL-076: adaptor. • TOOL-077: adaptor. • TOOL-078: adaptor. • TOOL-080-1: changeover wrench. • TOOL-083: thermostat calibration wrench. • TOOL-111: 5/64 in. Allen wrench. • TOOL-112: 7/64 in. Allen wrench. • Three AL-362, 0 to 30 psi gauges
	TOOL-100	Calibration instrument for pneumatic transmitter/receiver controller systems.
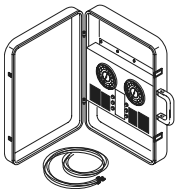	TOOL-100-500	Calibration instrument for pneumatic transmitter/receiver controller systems.

Illustration	Model No.	Description
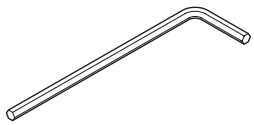	TOOL-110	3/32 in. hex wrench.
	TOOL-111	5/64 in. Allen wrench.
	TOOL-112	7/64 in. Allen wrench.
	TOOL-113	0.035 in. Allen wrench.

F-27383-1

a company of Schneider Electric

www.tac.com